DEPARTMENT OF TRANSPORTATION
111 GRAND AVENUE
P. O. BOX 23660
OAKLAND, CA 94623-0660
PHONE (510) 286-5635
TTY (800) 735-2929

Flex your power!
Be energy efficient!

RECEIVED

10:11 am, Mar 31, 2011
Alameda County
Environmental Health

March 29, 2011

Ms. Barbara Jakub
Hazardous Materials Specialist
Alameda County Environmental Health Services
1131 Harbor Bay Parkway, Suite 250
Alameda, CA 94502

Subject: Report Submittal- 6th Street & Castro Street, Oakland, CA 94607

Reference: ACEH Fuel Leak Case No. RO250, Facility Global ID # T0600102155

Dear Ms. Jakub:

On behalf of California Department of Transportation (Caltrans), I am pleased to submit the following environmental investigation reports for the above referenced site:

1. 6th at Castro St, Oakland Work Plan
2. 4th Quarter 2008 Quarter Groundwater Monitoring Report
3. 1st Quarter 2009 Groundwater Monitoring Report
4. 2nd Quarter 2009 Groundwater Monitoring Report
5. Caltrans Site Investigation 6th and castro_OAK9R048.pdf
6. 2nd Quarter 2000 GW Monitoring Report

The groundwater monitoring reports were prepared by Kleinflder, Inc. and Professional Service Industries. The work plan for further investigation was prepared by Northgate Environmental Management, Inc.

Certification

I certify under penalty of law that these documents are prepared for Caltrans by the consultants in accordance with the system designed to assure that qualified personnel properly gathered and evaluated the information submitted. Based on my inquiry of the person or persons who managed the system, or those persons directly responsible for gathering the information, the information submitted is, to the best of my knowledge and belief, true, accurate, and complete. I am aware that there are significant penalties for submitting false information, including the possibility of fine and imprisonment for knowing the violations.

If you have any questions, or comments, please contact me at (510) 286-5635.

Sincerely,

Charles D. Smith

CHARLES D. SMITH, P.E.
Senior Transportation Engineer
Office of Environmental Engineering

SITE INVESTIGATION
CALTRANS PROPERTY
SIXTH STREET AND CASTRO STREET
OAKLAND, CALIFORNIA

KLEINFELDER

April 24, 2009

Copyright 2009 Kleinfelder
All Rights Reserved

Unauthorized Use or Copying Of This Document Is Strictly Prohibited By Anyone Other Than the Client for the Specific Project

A Report Prepared for:

California Department of Transportation
Consultant Services Unit, District 4
111 Grand Avenue
Oakland, CA 94623-0660

SITE INVESTIGATION
CALTRANS PROPERTY
SIXTH STREET AND CASTRO STREET
OAKLAND, CALIFORNIA

Project No. 95539/4

Jeff Gravesen, EIT
Staff Engineer

Charlie Almestad, PG, CHG
Principal Professional

REGISTERED GEOLOGIST
CHARLES H. ALMESTAD
No. 6259
Exp. 7/31/09
STATE OF CALIFORNIA

KLEINFELDER WEST, INC.
1970 Broadway, Suite 710
Oakland, California 94612
(510) 628-9000

April 24, 2009

Copyright 2009, Kleinfelder

SITE INVESTIGATION
CALTRANS PROPERTY
SIXTH STREET AND CASTRO STREET
OAKLAND, CALIFORNIA

TABLE OF CONTENTS

EXECUTIVE SUMMARY 1

1 INTRODUCTION 3

2 SITE DESCRIPTION AND BACKGROUND 4
2.1 HISTORICAL SITE INFORMATION 4

3 FIELD ACTIVITIES 9
3.1 SOIL BORINGS 9
3.1.1 Soil Sampling 10
3.1.2 Groundwater Sampling 10
3.2 EXPLORATORY EXCAVATION 10
3.2.1 Field Procedures 11
3.2.2 Sample Collection 11
3.2.3 Trench Observations 12
3.3 MONITORING WELL INSTALLATION 14
3.3.1 Well Construction 14
3.3.2 Well Development 14
3.3.3 Surveying 15
3.3.4 Monitoring Well Sampling 15
3.4 WELL REPAIR AND BOLLARD INSTALLATION 16
3.5 DECONTAMINATION PROCEDURES 16
3.6 INVESTIGATION-DERIVED WASTE MANAGEMENT 17

4 CHEMICAL TESTING AND RESULTS 18
4.1 ANALYTICAL PARAMETERS 18
4.1.1 Soil Samples 18
4.1.2 Groundwater Samples 19
4.2 ANALYTICAL RESULTS 20
4.2.1 Soil Samples 20
4.2.2 Groundwater Grab Samples 22
4.2.3 Monitoring Well Samples 23
4.2.4 Chemical Indicators of Biodegradation 23
4.3 QUALITY ASSURANCE/QUALITY CONTROL 24

5 GROUNDWATER FLOW AND DIRECTION 25

6 PREFERENTIAL PATHWAY STUDY 26

Copyright 2009, Kleinfelder

7 SUMMARY OF RESULTS AND DISCUSSION 29

8 CONCLUSIONS AND RECOMMENDATIONS 33

9 LIMITATIONS 34

10 REFERENCES 36

LIST OF TABLES

Table 1 Well Construction Details Groundwater Elevations
Table 2 Groundwater Elevations: September 2008
Table 3 Summary of Soil Analytical Results
Table 4 Summary of Groundwater Analytical Results (Grab Samples)
Table 5 Summary of Groundwater Analytical Data (Monitoring Wells)
Table 6 Biological Parameters – Summary Analytical Data

LIST OF PLATES

Plate 1 Site Vicinity Map
Plate 2 Site Plan
Plate 3 Groundwater Elevation Contours: September, 2008
Plate 4 BTEX, TPHg & TPHd Concentrations in Groundwater: September, 2008
Plate 5 Estimated Extent of TPH Impacts to Soil and Groundwater: September, 2008

LIST OF APPENDICES

Appendix A Drilling Permits
Appendix B Soil Boring Logs
Appendix C Test Pit Field Logs and Photographs
Appendix D California Department of Water Resources Well Completion Reports
Appendix E Well Development Field Logs
Appendix F Licensed Land Surveyor's Report
Appendix G Monitoring Well Sampling Logs
Appendix H Laboratory Analytical Reports
Appendix I Underground Utility Plans

Copyright 2009, Kleinfelder

EXECUTIVE SUMMARY

This report presents the results of a site investigation of the property northwest of the intersection of Sixth Street and Castro Street in Oakland, California (the Site, as shown on Plate 1). This work was completed in general accordance with Kleinfelder's Workplan dated May 30, 2008, authorized by Mr. Charles Smith, of the California Department of Transportation (Caltrans), on July 23, 2008.

This site investigation was performed to address anomalies identified in previous geophysical survey performed at the site. The purpose of this investigation is to assess the extent of detected concentrations of petroleum-related compounds in soil and groundwater and to recommend further remedial action at the site, as necessary, prior to transfer of the property to another party.

It is Kleinfelder's opinion that the hydrocarbons detected in soil and groundwater from DP-5 and groundwater from MW-2, at the site originated from the former Mahoney's Flying A Service and Gas Station (operating between 1956 – 1967) that previously occupied the western corner of the site. No primary sources (e.g. USTs) of the soil and groundwater impacts were found. Based on the results of this investigation and on Kleinfelder's review of previous reports provided by Caltrans, it appears that impacted unsaturated zone soil is limited to the area of the former service station. The extent of groundwater impacts is also limited to the area under the former service station and a portion of 6th Street (Plate 5). Chemical evidence was developed that suggests that biological degradation of the groundwater plume is occurring and the plume appears to be generally stable.

Kleinfelder makes the following recommendations:

- Forward a copy of this report to the Alameda County Heath Services Agency, the lead regulatory agency.
- Advance soil borings in the vicinity of DP-5 and MW-2 in order to better define the vertical and lateral extent of the petroleum stained soil encountered in trenches T-E1, T-E1-Ext, and T-E2 and better define ground water impacts for further remedial action assessment purposes.
- Excavate the pipes encountered in trenches T-B, T-C, and T-E2.

Copyright 2009, Kleinfelder

- Assess residual risks at the site and prepare a corrective measures plan, as appropriate.

Copyright 2009, Kleinfelder

1 INTRODUCTION

Kleinfelder prepared this site assessment for the Caltrans-owned property, located on the northwest corner of Sixth Street and Castro Street in Oakland, California (site) (Plates 1 and 2). The work described in this report is generally consistent with the Workplan titled: Site Investigation Workplan, Caltrans Property Sixth Street and Castro Street, Oakland California, dated May 31, 2008, (Kleinfelder 2008) prepared on behalf of Caltrans, and in accordance with Task Order Number 3 issued on April 16, 2008 by Caltrans.

The scope of work described in this report includes:

- Permitting and coordinating site activities;
- Advancement of five soil borings;
- Collection and analysis of soil and groundwater samples;
- Installation of four monitoring wells;
- Development of four new monitoring wells and three existing monitoring wells;
- Collection and analysis of groundwater samples from monitoring wells;
- Advancement of six trenches, four potholes, and collection of soil samples;
- Surveying five direct push boring locations, seven monitoring wells, six trenches, four potholes;
- Preferential pathway study
- Preparation of this report.

Copyright 2009, Kleinfelder

2 SITE DESCRIPTION AND BACKGROUND

This Caltrans-owned site is located in Oakland, California and is bordered to the north by Seventh Street, to the south by Sixth Street, to the west by Brush Street, and to the east by Castro Street. The site is approximately 1.6 acres in size. The Site Assessors Parcel Number (APN) is 1-221-14-1. Addresses listed for the subject parcel include: 616 Brush Street; 603, 609, 611 and 615 Castro Street; 716, 720, 722, 728, 738 an 740 Sixth Street; and 701, 717, 725, 738, 747 Seventh Street.

The site is currently vacant and unpaved, although a few truck trailers are currently located along the northern boundary of the site. Two piers from an elevated section of Interstate 980 are situated on the northeastern corner of the property. The site is located in an area of commercial land use, is relatively flat and at an elevation of approximately 20 feet above mean sea level. A storm drain inlet is located on the western portion of the property.

2.1 HISTORICAL SITE INFORMATION

The State of California acquired the site between July 1, 1969 and March 30, 1971. Since this time, Caltrans has owned and maintained the site. The site was historically used for residential and commercial purposes. In approximately 1973, the buildings that occupied the site were removed or demolished with the exception of the residence at 722 Sixth Street. Buildings were not situated on the site after 1977. Although the site has been vacant since 1977, construction-related material was staged at the site during the construction of Interstate Highway 980 in 1985. The materials reportedly stockpiled on the site were soil, concrete, and wood. The site currently does not contain staged material.

Prior to the demolition of the buildings, the site was subdivided into lots, which were used for a gasoline retail and auto repair station, a machine shop, a dairy, a laundry facility, a materials warehouse, residences, and retail stores. Commercial and/or residential use on these lots dates back to at least 1936.

The first available environmental investigation at the site was performed in 1987 by ERM-West (ERM-West, 2001). ERM-West compiled a site history indicating the former

Copyright 2009, Kleinfelder

businesses on the site with potential environmental concern. This included a gas station, a dairy and a commercial warehouse. ERM-West stated that the gasoline station had at least two USTs and the creamery and warehouse maintained one UST each. ERM-West stated that it was their understanding that the USTs were removed at the time the buildings were demolished. ERM-West conducted a soil and groundwater study in which seven boreholes were advanced, ranging in depth from approximately 16.5 to 17.5 feet below ground surface (bgs) (Plate 2). The results of this investigation indicated detection of low concentrations of ethylbenzene, toluene, and xylene in four soil samples; three of these samples were collected from the western part of the site and one sample was collected from the eastern part of the site. Low concentrations of ethylbenzene, toluene, xylenes, hydrocarbons, and other aliphatic and alicyclic compounds were detected in a groundwater sample collected on the southwestern corner of the site.

According to information provided in a Phase I Environmental Site Assessment (ESA) Report prepared by Engeo Incorporated in January 1993 (Engeo, 1993), at least four former underground storage tanks (USTs) were installed at the site, and were utilized by a service station, warehouse, and dairy. The Oakland Fire Department issued a permit to Caltrans in January 1971 for the removal of three on-site USTs: one 10,000-, one 7,500-, and one 5,000-gallon. The permit listed the owner as the State of California Division of Highways. Fire Department Inspection Reports were not available for the businesses formerly occupying the site.

Engeo found that existing and potential impacts to the soil and groundwater have been documented on the site from a number of potential on-site sources. Based on this finding, Engeo recommended a subsurface investigation for the portion of the site where past site use could have included potential contaminants. This investigation would include collection of soil and groundwater samples with laboratory analysis. Records of a former groundwater production well at the site were found, however, upon visual inspection, it could not be located. Engeo recommended locating the well, and if found, to decommission the well according to applicable Alameda County ordinances. Engeo also recommended conducting a geophysical survey of the site to identify USTs or other subsurface structures prior to beginning an intrusive subsurface exploration. Engeo recommended sampling surface or near-surface soil to assess whether or not hazardous concentrations of lead are present from historical use of lead-based paints.

Copyright 2009, Kleinfelder

Engeo recommended decommissioning of the temporary monitoring well installed by ERM-West in 1987. In addition, review of an adjacent site, the Francis Plating Company, was recommended to evaluate potential impacts to the site. Engeo recommended groundwater characterization on the northeastern portion of the site to determine the potential downgradient impact from the former gasoline service station situated on the northern corner of Seventh Street and Castro Street.

A geophysical survey was conducted at the site by Norcal Geophysical Consultants (Norcal), Inc. on July 21, 1995 (Norcal, 1995). Five anomalies, A through E, were identified during the geophysical survey. Anomalies A, B, and D were located approximately in the middle of the site. Anomaly C and E were located on the southwestern part of the site. Anomalies A through C were characterized as high magnitude anomalies. Anomalies of these magnitudes and areal extents typically represent small USTs, or large isolated metallic objects such as utility vaults. However, the ground penetrating radar (GPR) data obtained over these anomalies resolved numerous zones of isolated hyperbolic signatures within the upper one to three feet that could represent a UST. Therefore, the source of these anomalies may also be buried deeper than the detection limits of the GPR. Anomalies D and E represented broad areas containing numerous magnetic gradients. Both anomalies comprised areas of approximately 5,000 to 10,000 square feet. The high magnitude values detected indicate significant disturbance of the magnetic gradient. GPR profiles were obtained over these anomalies. The data did not indicate hyperbolic signatures within the upper two to four feet that could represent a UST. Typically, isolated metal debris does not produce high magnitude anomalies as was indicated. Therefore, Norcal concluded that the source of these anomalies was buried too deep to be further characterized by the GPR.

A storm drain was identified during the course of the geophysical investigation. It was detected in the southwest corner of the site. Just north of the storm drain, a buried object, thought to be a large nonmetallic pipe or possibly a nonferrous tank was identified. Norcal estimated the depth of this object to be approximately two to three feet bgs.

In October 1995, Geocon was retained to conduct surface and subsurface soil sampling and groundwater sampling at the site. A total of seven borings were advanced at the

Copyright 2009, Kleinfelder

site (Plate 2). The surface and subsurface soil samples were analyzed for total lead, metals, and oil and grease. Groundwater samples were collected from two of the borings and were analyzed for total petroleum hydrocarbons as gasoline (TPH-g), total petroleum hydrocarbons as diesel (TPH-d), and benzene, toluene, ethylbenzene, and xylenes (BTEX). The results indicated that a maximum concentration of 410 milligrams per kilogram (mg/kg) of total lead was detected in site subsurface soil (location OAK2 at three feet bgs). In addition, a maximum concentration of 8,000 mg/kg of oil and grease was detected in site subsurface soil (location OAK6 at three feet bgs). Relatively low concentrations of metals were detected in site surface and subsurface soil. TPH-g, TPH-d, and BTEX concentrations were not detected in groundwater at or above the laboratory detection limits.

In 1996, International Technology Corporation (ITC) advanced 11 borings ranging in depth from approximately 15 to 23 feet bgs. Samples were collected at 0.5, 2.5, 6.5, 10.5, and 14.5 feet bgs. The samples collected were analyzed for TPH-g, TPH-d, oil and grease, and BTEX. The majority of analytes tested were not detected at or above the laboratory detection limit. One boring location, B1-11, located on the southwestern corner of the site, contained elevated concentrations of hydrocarbons and associated constituents in soil and groundwater.

In 1999, PSI advanced 11 soil borings and installed three groundwater monitoring wells at the site. The soil boring locations were in approximately the same location as ITC's soil boring locations (Plate 2). The soil samples were analyzed for oil and grease, TPH-g, TPH-d, BTEX, lead, methyl tert butyl ether (MTBE), and volatile organic compounds (VOCs). The results indicated that elevated concentrations of oil and grease and lead were detected throughout the site, especially in subsurface soil. PSI conducted groundwater monitoring in three wells, MW-1, MW-2, and MW-3, from the fourth quarter 1999 through the first quarter of 2001, for a total of seven quarters. See Plate 2 for the groundwater monitoring well locations. The groundwater samples were analyzed for TPH-g, TPH-d, TPH-motor oil (TPH-mo), oil and grease, BTEX, VOCs, and lead. For seven quarters, analytes tested in MW-1 and MW-3 contained either relatively low concentrations or concentrations below the laboratory detection limit. Monitoring well MW-2, located near the southwestern corner of the site, has exhibited elevated concentrations of TPH-g, BTEX, and volatile organic compounds (VOCs). The latest March 5, 2001 results indicated the following concentrations for MW-2: TPH-g at a

Copyright 2009, Kleinfelder

concentration of 65,000 micrograms per liter (µg/L); TPH-d at 6,500 µg/L; BTEX at 730, 3,100, 4,100, and 18,400 µg/L, respectively; and total VOCs at 4,720 µg/L.

In November 2001, IRIS Environmental conducted an investigation on the site and two adjacent parcels also owned by Caltrans for the Port of Oakland (Caltrans, 2002). Samples were collected from three areas or "blocks": five locations were within the Sixth and Castro property; nine locations were within "Interstate Block A" directly south of the site; and nine locations were within "Interstate Block B" southwest of the site. Discrete soil samples were obtained from up to five intervals at each location to a maximum depth of 10.5 feet bgs. One composite soil sample was collected from each location. Groundwater samples were collected from a subset of soil boring locations. The maximum reported concentration of petroleum hydrocarbons in soil was 770 mg/kg TPH-mo from the surface sample at location OAK-1BB-1. TPH-g was reported in soil at a maximum concentration of 1.4 mg/kg from the surface sample at location OAK-1BA-9 and the maximum reported concentration of TPH-d in soil was 290 mg/kg from the surface sample at location OAK-6C-1. The maximum lead concentration in soil was 1,400 mg/kg collected from location OAK-1BA-9 from 4.5 to 5 feet bgs. Ethylbenzene, toluene, and xylene were reported at low levels in most groundwater samples. The maximum concentration of TPH-g was 320 µg/L from location OAK-1BA-9.

Copyright 2009, Kleinfelder

3 FIELD ACTIVITIES

Kleinfelder performed an environmental site assessment (ESA) to assess the extent of petroleum hydrocarbons and related compounds previously detected in soil and groundwater at the site. As part of the ESA Kleinfelder drilled and sampled soil and groundwater in five soil borings, excavated and sampled soil in six trenches, and excavated five "potholes" to observe soils. Kleinfelder also installed four additional groundwater monitoring wells to monitor groundwater quality beneath the site and to assess the local groundwater flow gradient. Twenty-five soil samples and thirteen groundwater samples were collected for this assessment.

3.1 SOIL BORINGS

On September 2, 3, and 4, 2008, Kleinfelder collected soil and groundwater samples at nine locations at the site. Gregg Drilling of Martinez, California, Kleinfelder's subcontractor, provided drilling services for the nine locations. A truck-mounted Marl M 2.5 DP (direct-push) drill rig was used on September 2 and 3, 2008, and a track-mounted Marl M 2.5 DP (direct-push) drill rig was used on September 4, 2008. Gregg Drilling is a state-licensed well drilling contractor (Lic. No. C57-485165). Soil boring locations are shown on Plate 2.

Prior to drilling, Kleinfelder obtained drilling permits from the Alameda County Public Works Agency. Copies of the drilling permits are included in Appendix A. Kleinfelder called Underground Service Alert (USA) more than 48 hours before drilling to identify and contact utility companies with underground facilities in the investigation area (USA ticket no. 487192). Kleinfelder also retained Cruz Brothers Locators, private utility locators, to clear the boring locations for underground utilities and obstructions using geophysical methods prior to drilling.

Soil borings were advanced using a direct-push drilling rig. The direct-push rig advances a four-foot long steel core barrel and four-foot extension rods using a hydraulic cylinder and percussion hammer. The steel core barrel has an inside diameter of two inches and interchangeable acrylic liners, which allows for a continuous sample through the entire depth of the borehole. One boring was advanced to 20 feet below ground surface (bgs). Three borings were advanced to 22 feet bgs. Five borings

Copyright 2009, Kleinfelder

were advanced to 24 feet bgs. Soil was collected in acrylic liners and inspected for indications of staining or odors. The continuous soil samples were logged in the field using the Unified Soil Classification System. Groundwater samples were collected as described in Section 3.1.2 below. After groundwater samples were collected, temporary casings were removed and each borehole was backfilled with neat cement grout placed with a tremie pipe. The soil boring logs are included in Appendix B.

3.1.1 Soil Sampling

Soil samples were screened for organic vapors using a photo-ionization detector (PID). One soil sample was collected for chemical analysis from borings DP-1 through DP-4 for chemical analysis between 12 and 14 feet bgs, just above the water table in the capillary fringe. Two samples were collected from boring DP-5 at six and 12 feet bgs for chemical analysis. The selected samples from each boring were sealed on both ends with Teflon sheets and rubber end caps, stored onsite in an ice chest with water based ice, and transported to Torrent Laboratory, Inc. of Milpitas, California, a state-certified chemical testing laboratory (DHS ELAP certification no. 1991) under chain-of-custody protocol.

3.1.2 Groundwater Sampling

Groundwater was encountered at depths ranging from 12 to 15 feet bgs. Groundwater samples were collected through temporary PVC casing with five feet of screen. One groundwater sample was collected from five boring locations using a stainless steel bailer. Water samples were not collected from the four boring locations designated to be developed into monitoring wells at the time the borings were completed. Groundwater samples were placed in laboratory-supplied containers, labeled, stored onsite in an ice chest with water based ice, and transported to Torrent Laboratory, Inc. under chain-of-custody protocol.

3.2 EXPLORATORY EXCAVATION

Kleinfelder excavated six trenches and four “potholes” at the site on September 22, through 24, 2008 in order to identify potential sources of anomalies detected during the geophysical survey performed on July 21, 1995, to locate possible remnants of a fuel system used by the former Mahoney’s Flying A Service and Gas Station, previously

Copyright 2009, Kleinfelder

located on site, and to assess possible past releases on the site related to the operations of the service station. Kleinfelder extended the expiration date of the USA ticket obtained for drilling the soil borings to include the date for advancing the exploratory excavations. Field trench logs and photographs of the trenches are provided in Appendix C. Trench observations are summarized in Section 3.2.3.

3.2.1 Field Procedures

Six trenches and four potholes were excavated at the site on September 22, through 24, 2008 using a backhoe, provided and operated by Kleinfelder's subcontractor, Controlled Environmental Services (CES) of Oakley, California. The work was performed under the direction of Kleinfelder Staff Engineer Jeff Gravesen. The initial locations for the exploratory trenches – labeled T-A, T-B, T-C, T-D1, T-D2 T-D3, T-E1, and T-E2, according to Kleinfelder's Work Plan dated May 30, 2008, were selected based on geophysical anomalies detected during the geophysical survey of July 21, 1995, and the likely locations of potentially abandoned fuel system components associated with the former Mahoney's Flying A Service and Gas Station that previously occupied the site (Kleinfelder 2008). Due to field conditions described in Section 3.2.3, trench T-E1-Ext was advanced as an extension of trench T-E1. Due to a sub-surface metallic object identified by the utility locator, PH-1 was advanced near MW-4. Three pothole excavations, PH-2 through PH-4, were advanced at the ends of the proposed trenches T-D1 and T-E2 (Plate 2). Sketches of the trenches and potholes, and descriptions of the material encountered are shown on the Test Pit Field Log sketches provided in Appendix C

3.2.2 Sample Collection

Kleinfelder collected soil samples from the exploratory trenches. Soil samples were collected from the backhoe bucket. The soil samples were contained in two-inch by six-inch stainless steel tubes, sealed with Teflon squares and plastic end caps, placed in an ice chest with water based ice, and transported to Torrent Laboratory, Inc. under chain-of-custody protocol. Sample locations are shown on the Test Pit Field Log sketches provided in Appendix C.

Copyright 2009, Kleinfelder

3.2.3 Trench Observations

This section presents a summary of observations made during trenching. Log sketches which include detailed soil descriptions, sample locations, pipes encountered, and other observations are included in Appendix C. Also, selected photographs from each trench are included in Appendix C.

Trench T-A was advanced on September 23, 2008. Evidence of petroleum contamination was not observed during this excavation. Photograph T-A-001 in Appendix C shows part of the trench and equipment used in the trenching operation.

Trench T-B was advanced on September 24, 2008. Several metal pipes were observed three to four feet below ground surface (bgs) in this excavation including two, 2-inch diameter pipes and one ½-inch conduit running perpendicular to the excavation, and one 3-inch diameter pipe running oblique to the excavation. Evidence of petroleum contamination was not observed during this excavation. Photograph T-B-005 in Appendix C shows some of the pipes observed in the trench.

Trench T-C was advanced on September 23, 2008. One three inch, interior diameter composite pipe was observed 1.5 feet bgs, running oblique to the excavation. Photograph T-C-004 shows the pipeline in place. Note the clean-out fitting in the left-center of the photograph. Photograph T-C-003 is a close-up of a broken section of the pipe. The pipe was disturbed during back-fill and compaction activities. Evidence of petroleum contamination was not observed during this excavation.

Trench T-D3 was advanced on September 24, 2008. A layer of soil with brick and concrete debris extended from 0.5 feet bgs to two feet bgs. Evidence of petroleum contamination was not observed during this excavation.

Trench T-E1 was advanced on September 23, 2008. Evidence of petroleum contamination was observed over approximately 25 feet of the east end of this excavation, from approximately five feet bgs and extending beyond the bottom of the excavation at eight feet bgs.

Copyright 2009, Kleinfelder

Trench T-E1-Ext was advanced on September 24, 2008. Excavation T-E1-Ext was advanced to help determine the lateral extent of the petroleum hydrocarbon stained soil observed in excavation T-E1. Evidence of petroleum contamination appeared to extend over the bottom of this excavation, from approximately six feet bgs, beyond the bottom of the excavation at approximately nine feet bgs. A pipe running perpendicular to this excavation was observed approximately one foot bgs.

Trench T-E2 was advanced on September 22, 2008. Several metal pipes were observed one to two feet bgs in this excavation including four, 2-inch diameter pipes, and two ½-inch conduit pipes, running perpendicular or oblique to the excavation, and one 2-inch diameter metal pipe running parallel and vertical to the excavation that was inadvertently removed while advancing the excavation. A 2-inch diameter composite pipe running vertical to the excavation was observed at the west end of the excavation that extended approximately 10 feet bgs. When the retractable tape measure used to measure the vertical extent of this pipe was removed, liquid was not observed on the tape. Evidence of petroleum contamination was observed at the east end of the excavation at a depth of approximately six feet bgs, and extending beyond the bottom of the excavation at a depth of approximately eight feet bgs. Photograph T-E2-002 in Appendix C shows some of the piping found in Trench T-E2. Photograph T-E2-010 in Appendix C shows the temporary stockpiling operation at the site.

Pothole PH-1 was advanced on September 24, 2008, to a depth of approximately 3 feet bgs. Three metal pipes, and metal debris was observed approximately 0.5 to 2.5 feet bgs in this excavation, including one, 2-inch diameter pipe, two ¾-inch conduit pipes running perpendicular to the excavation and piece of steel debris approximately 8-inches by 2-feet. Evidence of petroleum contamination was not observed during this excavation.

Potholes PH-2, PH-3, and PH-4 were advanced on September 24, 2008, to depths of approximately 3 feet. Debris encountered was consistent with trench T-C and included brick, concrete, asphalt and metal wire. Evidence of petroleum contamination was not observed during these excavations.

Copyright 2009, Kleinfelder

3.3 MONITORING WELL INSTALLATION

Kleinfelder installed four monitoring wells on the site on September 3, and 4, 2008, using a truck-mounted hollow stem auger drill rig. Gregg Drilling provided drilling services for the well installation under Kleinfelder's supervision. Prior to drilling, Kleinfelder obtained drilling permits to install the four monitoring wells from the Alameda County Public Works Agency. Copies of the permits are included in Appendix A. California Department of Water Resources (DWR) Well Completion Reports were submitted to Alameda County Public Works Agency and forwarded to the DWR. Copies of the Well Completion Reports are included in Appendix D.

3.3.1 Well Construction

Monitoring wells were installed using a truck-mounted hollow-stem auger drill rig equipped with eight-inch hollow stem augers. Monitoring wells were co-located with soil borings. Soil samples were collected by direct push method, prior to the installation of the monitoring well. Well construction details are included on Table 1, and graphically represented on the soil boring logs associated with each well, included in Appendix B. Each well casing is constructed of two-inch inside diameter schedule 40 PVC with 10 feet of 0.010-inch slotted screen. Monitoring wells MW-4 through MW-7 have total borehole depths of approximately 23 feet bgs. Total depths measured from the top of the well casing are noted on Table 1.

A filter pack consisting of #2/16 sand was placed in the annular space surrounding the screened portion of each well casing and extending two feet above the top of the screen. A sanitary seal consisting of two feet of bentonite was placed in each well boring annulus and allowed to hydrate for at least 30 minutes prior to placing neat cement grout to the surface. Monitoring wells were secured above ground level with monument style well covers installed to approximately four feet above ground surface.

3.3.2 Well Development

Kleinfelder developed the new monitoring wells MW-4 through MW-7, and existing monitoring wells MW-2 and MW-3, on September 8, 2008, more than 72 hours after the new wells were installed. Well development was completed by surging the water in each well with a surge block over the wetted screened interval, and purging each well

Copyright 2009, Kleinfelder

using a high-flow submersible pump until the water ran clear. The volume of water removed from each well ranged from 17 to 20 gallons. Well development logs are included in Appendix E. Monitoring well MW-1 was not developed due to prior damage described in Section 3.4. Water quality parameters were not obtained during the development of monitoring well MW-2, given equipment decontamination concerns and to prevent potential cross-contamination.

3.3.3 Surveying

On September 24, 2008, Mid Coast Engineers, (Mid Coast) of Watsonville, California, a licensed land surveyor, surveyed the tops of casings of each monitoring well, the location of each soil boring, the ends of each excavation, and other site features (i.e. street curbs and perimeter site fence). Elevations were measured to the nearest 0.01 foot. The survey was completed to State Water Resources Control Board Geotracker standards. The surveyor's report is included in Appendix F.

3.3.4 Monitoring Well Sampling

Groundwater samples were collected from the monitoring wells on September 16, 2008. The groundwater monitoring activities are presented in the following subsections.

3.3.4.1 Water Level Measurement

Prior to purging, the depth to water was measured in each of the four wells to the nearest 0.01-foot using a clean electronic water-level indicator. Measurements were recorded in field notes and Well Development and Sampling Logs (Appendix G), and are shown on Table 2. Isopotential groundwater elevation contours are depicted on Plate 3.

3.3.4.2 Groundwater Sample Collection

Prior to sampling, monitoring wells MW-2 through MW-7 were purged of at least three well casing volumes using disposable bailers. The wells did not run dry during purging activities. During the purging process, groundwater parameters including pH, temperature, electrical conductivity, dissolved oxygen, turbidity and oxidation-reduction potential were measured using a YSI 556 water quality meter. Water levels in each

Copyright 2009, Kleinfelder

monitoring well were allowed to recover to at least eighty percent of static water levels as measured prior to purging before samples were collected. Due to damage described in the following section, a grab sample was obtained from monitoring well MW-1. The field data sheets are provided in Appendix G

Groundwater samples from each monitoring well were collected using dedicated disposable polyethylene bailers and decanted into appropriate laboratory-supplied containers, labeled with unique sample numbers and other pertinent information, and placed in a chilled ice chest packed with cooled to approximately 4 ± 2 degrees Celsius (^{o}C) for transport under chain of custody to Torrent Laboratory (Torrent) in Milpitas, California. Torrent is a laboratory accredited by the California Department of Public Health Environmental Laboratory Accreditation Program (ELAP) for the specific analyses requested (DHS ELAP Certification No. 1991).

3.4 WELL REPAIR AND BOLLARD INSTALLATION

At the onset of field activities at the site, monitoring well MW-1 was observed to be listing approximately 15 degrees. Gregg Drilling reset the protective well cover in concrete. However, the damage sustained to the well casing inside the protective steel cover, approximately one foot bgs, would not allow a 1.5 inch diameter disposable bailer to pass. Subsequently, a ¾-inch disposable bailer was used to collect a groundwater sample from monitoring well MW-1.

On September 4, 2008, a total of 13 bollards were strategically installed to make the wells more visible and help protect them from damage. Four bollards were installed around MW-1, three bollards were installed to the southeast of MW-4, and two bollards were installed to the northeast of MW-2, MW-3, and MW-5.

3.5 DECONTAMINATION PROCEDURES

Non-expendable sampling equipment, including drilling rods, augers, samplers, stainless steel bailers and water level indicators, were decontaminated prior to each use using an Alconox detergent water solution and two-stage rinse. Expendable equipment, including tubing, disposable bailers, sample containers, and liners, were discarded after each use. New expendable equipment was used whenever possible.

Copyright 2009, Kleinfelder

3.6 INVESTIGATION-DERIVED WASTE MANAGEMENT

Waste soil cuttings, purge water and decontamination rinsates generated during this investigation were placed in DOT 17H 55-gallon steel drums and left at the Site pending approval of a waste profile. The waste was characterized as non-hazardous, and nine drums containing soil and two containing water were removed and disposed of by Dillard Environmental Services.

Copyright 2009, Kleinfelder

4 CHEMICAL TESTING AND RESULTS

Soil and groundwater samples were submitted to Torrent Laboratory, Inc. of Milpitas, California for analysis.

4.1 ANALYTICAL PARAMETERS

4.1.1 Soil Samples

Ten soil samples collected September 2, 3, and 4, 2008, from soil borings (DP-1 through DP-5, and MW-4 through MW-7) were analyzed to asses the extent of petroleum impacts and provide information for potential future remediation. These samples were analyzed for the following parameters:

- Volatile organic compounds (VOCs) and fuel oxygenates using EPA Method 8260;
- Total petroleum hydrocarbons (TPH) in the gasoline (TPHg), and diesel (TPHd) ranges with silica gel cleanup using EPA Method 8015; and
- Total Organic carbon (TOC) using EPA Method 415.1

Five near surface soil samples collected on September 22, 23, and 24, 2008, from trench excavations (T-A, T-B, T-C, T-D3, and T-E2) were analyzed to assess impacts from other potential past uses or practices on the property. These samples were analyzed for the following parameters:

- Pesticides using EPA Method 8081; and
- Polychlorinated biphenyls (PCBs) using EPA Method 8082.

Nineteen soil samples, composited into four, four-point composite samples, and one three-point composite sample, plus three discrete soil samples collected September 22, 23, and 24, 2008, from excavations, were analyzed to assess the extent of petroleum impacts, potential impacts from other past uses of the property, and potentially impacted soil where geophysical anomalies were discovered. These samples were analyzed for the following parameters:

- VOCs and fuel oxygenates using EPA Method 8260;

Copyright 2009, Kleinfelder

- TPHg, and TPHd ranges with silica gel cleanup using EPA Method 8015;
- Semi volatile organic compounds (SVOCs) using EPA Method 8270; and
- CAM 17 metals using EPA Method 200.7.

4.1.2 Groundwater Samples

Grab groundwater samples were collected from five soil borings (DP-1 through DP-5) on September 2 and 3, 2008 to assess the horizontal extent of petroleum hydrocarbon impacts in groundwater. These samples were analyzed for the following parameters:

- VOCs and fuel oxygenates using EPA Method 8260; and
- TPHg, and TPHd using EPA Method 8015

Groundwater samples were collected from the monitoring wells (MW-1 through MW-7) on September 16, 2008 to assess the horizontal extent of petroleum hydrocarbons. These samples were analyzed for the following parameters:

- VOCs and fuel oxygenates using EPA Method 8260;
- TPHg, and TPHd using EPA Method 8015; and
- Total Dissolved Solids using EPA Method 160.

Additional groundwater samples were collected from three monitoring wells (MW-2, MW-4 and MW-5) on September 16, 2008 to assess chemical conditions associated with biological mediated breakdown of petroleum hydrocarbons in groundwater. These wells were selected to represent, based on groundwater flow patterns previously inferred by others, groundwater conditions upgradient of the source zone (MW-4), groundwater conditions in the petroleum hydrocarbon source zone (MW-2), and groundwater conditions downgradient of the petroleum hydrocarbon source (MW-5). Samples from these monitoring wells were additionally analyzed for the following analytes / parameters:

- Nitrate and Nitrite using EPA Method 300.0;
- Sulfate using EPA Method 300.0;
- Sulfite using EPA Method 377.1; and
- Dissolved Ferrous Iron using Standard Method SM3500-Fe B; and

Copyright 2009, Kleinfelder

- Dissolved oxygen, oxidation/reduction potential, and pH.

One groundwater duplicate sample was collected for quality control purposes from monitoring well (MW-2) on September 16, 2008, and analyzed for the following analytes:

- VOCs and fuel oxygenates using EPA Method 8260; and
- TPHg, and TPHd using EPA Method 8015;

4.2 ANALYTICAL RESULTS

Analytical data for soil samples collected from borings and trenches on September 2, 3, 4, 22 and 23, 2008, are summarized on Table 3. Analytical data for groundwater grab samples collected on September 2 and 3, 2008, are summarized on Table 4. Analytical data for groundwater samples collected from the monitoring wells on September 16, 2008, are summarized on Tables 5 and 6. Analytical reports from Torrent Laboratory, Inc. are included in Appendix H. The locations of soil borings and monitoring wells are shown on Plate 2.

Analytical results are compared to Environmental Screening Levels (ESLs) established by the San Francisco Bay Regional Water Quality Control Board (RWQCB). For the purposes of this investigation, the ESLs established for shallow soil in residential areas and in commercial/industrial areas where groundwater is a current or potential source of drinking water were used. RWQCB ESLs do not represent regulatory action levels for contaminants, however they provide a guideline from which to assess risk factors associated with the presence of chemicals in soil, groundwater and soil gas.

4.2.1 Soil Samples

4.2.1.1 Soil Borings

The following VOCs were detected in soil sample DP-5-12, collected at a depth of 12 feet bgs, at concentrations exceeding their ESL values: ethylbenzene at 97 milligrams per kilogram (mg/kg), total xylenes at 500 mg/kg, naphthalene at 140 mg/kg and n-propyl benzene at 53 mg/kg. 1,2,4-trimethylbenzene, 1,3,5-trimethylbenzene, and n-butyl benzene were detected at concentrations of 470, 140, 35 and 53 mg/kg

Copyright 2009, Kleinfelder

respectively. ESL values have not been established for these compounds. Other VOCs were not detected at or above laboratory reporting limits in soil sample DP-5-12. VOCs were not detected at or above laboratory limits in the remaining nine soil sample collected from soil borings.

TPHg and TPHd were detected in soil sample DP-5-12 at concentrations of 1,300 and 588 mg/kg respectively, exceeding the ESLs of 83 mg/kg for TPHg and 83 mg/kg for TPHd. TPHg and TPHd were not detected at or above laboratory reporting limits in the remaining nine soil samples analyzed.

4.2.1.2 Trenches

The following VOCs were detected at concentrations below their respective ESL values in soil sample T-E1-2-8: ethylbenzene and total xylenes. 1,2,4-trimethylbenzene, 1,3,5-trimethylbenzene, 4-isopropyltoluene, n-butyl benzene and n-propyl benzene were also detected. ESL values have not been established for these compounds. 1,2,4-trimethylbenzene was also detected in soil sample T-E1-3-8. Other VOCs were not detected at or above laboratory reporting limits in the soil samples analyzed from trenches. VOCs were not detected at or above laboratory reporting limits in composite soil samples collected from trenches.

SVOCs were not detected at or above laboratory reporting limits in the soil samples analyzed from trenches.

TPHg and TPHd were detected in soil sample T-E1-2-8 at concentrations below the ESLs for TPHg and TPHd. TPHg was also detected in soil sample T-E1-3-8 below its ESL. TPHg and TPHd were not detected at or above laboratory reporting limits in composite soil samples collected from trenches.

4,4-Dichlorodiphenyltrichloroethane (DDT) was detected at a concentration below its ESL in soil sample T-D3-2-4. Organochlorine pesticides were not detected at or above laboratory reporting limits in the remaining soil samples collected from trenches.

PCBs were not detected at or above laboratory reporting limits in the soil samples collected from trenches.

Copyright 2009, Kleinfelder

Arsenic was detected at concentrations exceeding its ESLs in soil samples and composite soil samples collected trenches. Vanadium was detected at concentrations exceeding its residential ESL in soil samples and composite soil samples collected from trenches. While concentrations of these constituents exceed their ESLs, they are within the range of naturally occurring background concentrations reported by the Lawrence Berkeley National Laboratory Environmental Restoration Program (1995) and by Shacklette and Boerngen, 1984. Other metals were either not detected at or above laboratory reporting limits, or were detected at concentrations below their respective ESLs.

4.2.2 Groundwater Grab Samples

VOCs were not detected at or above laboratory reporting limits in groundwater samples collected from soil boring DP-2, DP-3 and DP-4. 1,2-dichloroethane was detected in groundwater sample DP-1 at a concentration of 31.7 micrograms per liter (µg/L), exceeding the California maximum contaminant level (MCL) and the ESL of 0.5 µg/L. The following VOCs were detected in the groundwater grab sample collected from boring DP-5 at concentrations exceeding their respective ESLs and MCLs: benzene at 69.8 µg/L, ethylbenzene at 615 µg/L, toluene at 263 µg/L, total xylenes at 3080 µg/L, and naphthalene at 235 µg/L (an MCL has not been established for naphthalene). The following VOCs associated with gasolines were also detected in groundwater grab sample DP-5: 1,2,4-trimethylbenzene at 882 µg/L, 1,3,5-trimethylbenzene at 291 µg/L, 4-ispropyltoluene at 21.1 µg/L, isopropylbenzene at 34.8 µg/L, n-butylbenzene at 35.0 µg/L, n-propylbenzene at 151 µg/L and sec-butylbenzene at 13.0 µg/L. ESLs and MCLs have not been established for these compounds.

TPHg and TPHd were not detected at or above laboratory reporting limits is groundwater grab samples collected from soil borings DP-1, DP-2, DP-3 and DP-4. TPHg was detected at a concentration of 11,900 µg/L in the groundwater grab sample collected from soil boring DP-5, exceeding the ESL of 100 µg/L. TPHd was detected at a concentration of 2,410 µg/L in the groundwater grab sample collected from soil boring DP-5, exceeding the ESL of 100 µg/L. Plate 4 shows the locations of soil borings and monitoring wells and the concentrations of TPH and aromatic hydrocarbons detected in groundwater grab samples collected at each location.

Copyright 2009, Kleinfelder

4.2.3 Monitoring Well Samples

VOCs were not detected at or above laboratory reporting limits in groundwater samples collected from monitoring wells MW-1, MW-3, MW-5 and MW-7. Trichloroethylene (TCE) was detected at a concentration below its ESL and MCL in MW-4. Tetrachloroethylene (PCE) was detected at a concentration below its ESL and MCL in MW-6. The following VOCs were detected at concentrations exceeding their respective ESLs and MCLs in well MW-2: benzene at 496 µg/L, ethylbenzene at 1,530 µg/L, toluene at 1,710 µg/L, total xylenes at 8,040 µg/L, 1,2-dichloroethane at 41.4 µg/L, and naphthalene at 1,050 µg/L (an MCL has not been established for naphthalene). The following VOCs were also detected in the groundwater sample collected from MW-2: 1,2,4-trimethylbenzene at 2,120 µg/L, 1,3,5-trimethylbenzene at 410 µg/L, isopropylbenzene at 66.0 µg/L, and n-propylbenzene at 270 µg/L. ESLs and MCLs have not been established for these compounds.

TPHg was detected at a concentration of 47,000 µg/L in the sample collected from monitoring well MW-2. The ESL for TPHg in groundwater is 100 µg/L. TPHd was detected at a concentration of 2,800 µg/L in the sample collected from monitoring well MW-2. The ESL for TPHd in groundwater is 100 µg/L. TPHg and TPHd were not detected at or above laboratory reporting limits in the samples collected from monitoring wells MW-1, MW-3, MW-4, MW-5, MW-6 and MW-7. A field duplicate sample was collected from well MW-2 with similar results.

4.2.4 Chemical Indicators of Biodegradation

As noted in Section 4.1.2, groundwater samples collected from three selected monitoring wells (source area well MW-2, upgradient well MW-4, and downgradient well MW-5) were analyzed for inorganic compounds and other parameters that are chemical indicators of biodegradation of fuel hydrocarbons. Inorganic analytes included nitrate, nitrite, sulfate, sulfite, and ferrous iron. Other water quality parameters, including dissolved oxygen (DO), pH, and oxidation reduction potential (ORP), were measured down hole in monitoring wells MW-2 through MW-7. Field parameters were not measured in monitoring well MW-1 due to damage to the well.

Copyright 2009, Kleinfelder

In the samples nitrate was detected at concentrations ranging from 2.4 (well MW-5) to 20 mg/L. Nitrite was not detected at or above the reporting limit. Sulfate was detected at concentrations ranging from 77 (MW-2) to 240 mg/L. Sulfite was not detected in the samples at or above the method reporting limit. Ferrous iron was detected at 1.4 mg/L in the sample from MW-2, but not reported in the samples from MW-4 and MW-5.

In the field, DO was measured at concentrations ranging from 0.53 mg/L (MW-7) to 1.19 mg/L (MW-6). ORP was measured and found to range from -86.4 millivolts (mV) (MW-2) to 105 mV (MW-3). The pH of the groundwater ranged from 6.41 to 6.87, a range conducive for microbial degradation of fuel hydrocarbons.

Results of the biologic indicator testing are summarized in Table 6. A discussion of the results is found in Section 7 of this report.

4.3 QUALITY ASSURANCE/QUALITY CONTROL

Laboratory QC data were within laboratory control limits. Based on the laboratory QC data, the data collected are considered to be acceptable for the intended use. A duplicate groundwater sample from MW-2 was collected on September 16, 2008. The results for the duplicate sample are included in Table 5 and the analytical reports are provided in Appendix H

Copyright 2009, Kleinfelder

5 GROUNDWATER FLOW AND DIRECTION

Surveyed top-of-casing elevations and static water level measurements in the seven monitoring wells were used to calculate the groundwater gradient in the investigation area. Based on these measurements, Kleinfelder has prepared a groundwater elevation contour map (Plate 3) Groundwater appears to flow generally to the south-southwest with a hydraulic gradient of 0.004. The direction of groundwater flows differs somewhat from that found by PSI in July of 1999 (PSI, 1999) and that found by ERM West in 2001 (ERM West, 2001). PSI reported groundwater flow to the southeast and ERM West reported ground water flow to the south.

Copyright 2009, Kleinfelder

6 PREFERENTIAL PATHWAY STUDY

The City of Oakland Public Works Department was contacted for information on sewers and other subsurface utility alignments at and in the vicinity of the site. Street survey plans and plans showing the location of storm drains and sanitary sewer pipelines were obtained from the City. As-built plans (dated October 30, 1989) were obtained from Caltrans for the site vicinity showing other subsurface utilities, including fire alarm conduits and pull boxes, East Bay Municipal Utilities District (EBMUD) pipelines, PG&E gas mains and conduits, Western Union conduits, and PT&T conduits. Copies of these plans are included in Appendix I.

No depth information is available for utility conduits and pipelines identified on the Caltrans plans, however given the type of utilities shown on the plans (gas, electrical and drinking water pipelines etc.), these utilities are likely located close to the ground surface (i.e. within about five to 10 feet of ground surface). Given that these utilities are well above the groundwater table, currently found at about 15 to 17 feet below the ground surface, the utility lines or backfill materials used in the utility trenches will not influence groundwater flow.

The City of Oakland storm drain and sewer plans show a sanitary sewer line crossing the subject property parallel to 6th Street. Details concerning this pipeline are not available on the City plans; however, City staff who reviewed the drawings with Kleinfelder believes that this sewer pipeline has been abandoned. Since this sewer line is upgradient of the groundwater plume at the site, this abandoned sewer line is not discussed further in this report.

Of interest, the City of Oakland plans show storm drains that flow to the southwest located under Brush and Castro Streets. Also, of interest is a sewer pipeline that flows to the southwest under Castro Street. Laterals from the storm drain pipeline under Brush Street extend along 6th and 7th Streets approximately half the distance between Brush and Castro Streets. Laterals from either the storm drain or sewer pipelines under Castro Street were also constructed under 6th Street, adjacent to the site. The laterals from the pipelines under Castro Street are labeled “abandoned” on the plans and their former use is not indicated on the plans.

Copyright 2009, Kleinfelder

Groundwater flow from the vicinity of the former service station on the subject site has been found to be toward the storm drain and/or sewer laterals under 6th Street and storm drain and sewer pipelines under Castro Street. The active storm drain lateral from Brush Street has flow-line elevations ranging from 8.65 feet to 7.75 feet (with flow to the northwest). The flow-line elevations of the two abandoned pipelines are not available; however the flow line elevation of the storm drain pipeline below Castro Street is 5 feet. These pipeline flow-line elevations are within the range of groundwater surface elevations observed at the site, and therefore, these utility pipelines, or more likely the utility trench backfill materials, may influence ground water flow as discussed below.

Historic groundwater surface elevation and flow data for the site are summarized as follows:

- In July 1999 groundwater surface elevations at the site ranged from 6.47 feet to 7.35 feet and groundwater flow was to the southeast, toward Castro Street (PSI, 1999).
- In March 2001 groundwater surface elevations ranged from 7.18 feet to 8.75 feet and groundwater flow was to the south, toward the abandoned laterals (ERM West, 2001).
- In September 2008 groundwater surface elevations ranged from 8.49 feet to 9.32 feet and groundwater flow was to the southwest, toward the active storm drain lateral draining to Brush Street.

Assuming the elevation datums used for the utility pipeline surveys and the well surveys are comparable, the somewhat differing ground water flow directions (southeast, south and southwest) could be related to, and explained by, the variations in groundwater surface elevation and the respective depths of the storm drain and sewer laterals and main pipelines. For example, groundwater flow under low groundwater conditions (July 1999) appears to flow toward the deeper sewer and storm drain pipeline trenches along Castro Street. In this case, groundwater surface elevations were below the elevation of the flow line of the active storm drain that drains toward Brush Street, but above the five foot flow-line elevation in the Castro Street storm drain pipeline. In contrast, groundwater flow under high groundwater conditions (September 2008) appears to be

Copyright 2009, Kleinfelder

toward the southwest, and the active (and higher elevation) storm drain lateral on 6th Street installed at about the same elevation.

Although these storm drain and sewer pipelines (more likely the pipeline trench backfill) may influence groundwater flow at the site, assessment of the groundwater chemical data does not indicate extensive petroleum hydrocarbon migration to the south or southeast (i.e. the plume does not extend more than 75 to 100 feet in those directions). Therefore the abandoned storm drain and/or sewer laterals to and under Castro Street do not appear to intercept the plume. To the southwest, when groundwater levels are relatively high, the plume may intercept the bottom of the active storm drain pipeline / trench. However, the active storm drain lateral, or lateral trench backfill, may have limited influence on groundwater flow because: 1) the groundwater hydraulic gradient (see Plate 3) appears relative uniform across the site and 6th Street, and 2) chemicals of interest in groundwater downgradient of the active storm drain lateral at boring DP-1 and monitoring well MW-6. Collectively these observations suggest that the storm drain pipeline may have no significant influence on ground water flow patterns. Given these factors, it is concluded that further investigation of the subsurface utilities is not warranted at the site, unless groundwater levels rise significantly from what they are currently.

Copyright 2009, Kleinfelder

7 SUMMARY OF RESULTS AND DISCUSSION

This section presents a summary and discussion of results from this investigation.

Sources of Impacts

Previous investigators of the site have reported that at least four USTs were present at the site at one time and that Caltrans obtained a permit in 1971 to remove three on-site USTs (Engeo, 1993). To further assess the potential presence of residual USTs or other sources of impacts at the site, trenching was performed by Kleinfelder in areas where geophysical anomalies were previously found and at the former service station. No discrete source (e.g. remaining USTs) of TPH impacts was found in this investigation; however numerous abandoned pipelines which may include former product pipelines are present in shallow soils at the site. TPH impacted soil at depths of less than ten feet appears to be limited to the vicinity of the former Mahoney's Flying A Service & Gas Station (1956 – 1967) located at the western corner of the site. The TPH impacted soil may act as a secondary source of groundwater impacts at the site.

The source of the anomalies reported in the geophysical survey in the vicinity of trench T-D3 and potholes PH-2, PH-3, and PH-4 appeared to be a layer of debris, including chunks of brick, concrete, asphalt, and pieces of metal. The layer of debris observed in the trench and potholes was approximately 1.5 feet thick, and located approximately 0.5 feet bgs.

The sources of the anomalies reported in the geophysical survey in the vicinity of trenches T-B, T-C, T-E2 and pothole PH-1 appeared to be metal and composite pipes, and metal debris.

Extent of Petroleum Hydrocarbon Impacts

Based on data obtained in this and previous investigations at the site, the estimated extent of the TPH impacts to soil less than ten feet deep is depicted on Plate 5. The estimated extent of the TPH impacts to groundwater based on data obtained in this and previous investigations at the site is also depicted on Plate 5. The data available to

Copyright 2009, Kleinfelder

generate this plate are limited in the vicinity of boring OAK7 and near OAK-2 and T-E1-EXT.

Groundwater Flow

All seven of the monitoring wells were surveyed and groundwater levels were measured in the wells to assess the hydraulic gradient and estimate groundwater flow patterns. In the past groundwater was reported to flow beneath the site to the south and southeast. In September 2008 groundwater was found to flow to the southwest. The hydraulic gradient in September 2008 was estimated at 0.004 feet/foot. Differences in flow directions may be related to groundwater surface elevations as discussed in Section 6.

Preferential Pathways

Storm drain and sewer pipelines (and / or trench backfill) at depth may influence groundwater flow patterns at the site depending on groundwater levels. However, there is no evidence that these utility pipelines (or trench backfill) at depth have acted as a conduit for significant hydrocarbon migration as discussed in Section 6.

Indicators of Biodegradation of Petroleum Hydrocarbons

Indigenous microorganisms have been shown to degrade a variety of hydrocarbons including gasoline and aromatic hydrocarbons (Wiedemeier, et al., 1995). During biodegradation microorganisms transform available nutrients into forms useful for energy and cell reproduction by facilitating the transfer of electron from donor chemicals to acceptor chemicals. Electron donors include natural organic matter, aromatic hydrocarbons and fuel hydrocarbons. Electron acceptors are compounds or elements that occur in oxidized states. In groundwater important electron acceptors included dissolved oxygen (DO), nitrate, ferric iron, sulfate and carbon dioxide. For thermodynamic reasons microorganisms preferentially utilize those electron acceptors that provide the greatest amount of free energy during respiration. The general order of preference by microbes is: DO, nitrate, ferric iron, sulfate and carbon dioxide.

Selected samples from the site were tested to assess potential biodegradation of the fuel hydrocarbons at the site. Groundwater from monitoring well MW-4 was sampled to represent upgradient groundwater quality, MW-2 was sampled to represent

Copyright 2009, Kleinfelder

groundwater conditions within the hydrocarbon plume, and MW-5 was sampled to represent conditions downgradient of the plume. Selection of these wells to represent upgradient and downgradient conditions was made based on flow pattern information from past studies at the site by others. Subsequent to biological indicator parameter sampling and testing, groundwater flow was found to be to the southwest during this investigation; therefore the sample from monitoring well MW-5 may not now be entirely representative of downgradient conditions.

The following is a discussion of the results for each major biodegradation indicator or parameter listed on Table 6.

- DO. Aerobic biodegradation occurs until DO is essentially depleted. Anaerobic microorganisms generally cannot function at dissolved oxygen concentrations greater than 0.5 mg/L. The chemical data indicate near depletion of DO at MW-2 (0.77 mg/L) and MW-7 (0.53 mg/L), but DO is available to support biological degradation upgradient (MW-4) and in other non-impacted areas (e.g. MW-6) of the site.

- Nitrate. After DO has been depleted, nitrate may be used as an electron acceptor. In this process nitrate (NO_3) is reduced to nitrite (NO_2), NH_4 and N_2. Nitrate was reported in the samples and therefore available for microbial use as an electron acceptor. In the groundwater sample collected from MW-2 (within the plume) the nitrate concentration was lower (5.2 mg/L) than that found in upgradient well MW-4 (20 mg/L). The lowest concentration was reported in the sample from MW-5 (2.4 mg/L) where no petroleum hydrocarbons have been reported. This location was at one time downgradient of the source and therefore the chemical conditions there may represent residual chemical conditions as groundwater migrated toward MW-5 from where the source area was located.

- Ferric Iron. When ferric iron (Fe^{+3}) is used as an electron acceptor the iron is reduced to ferrous iron (Fe^{+2}). Ferrous iron was reported in the sample from within the plume (1.4 mg/L at MW-2) but not elsewhere. Ferric iron was not analyzed. This result would suggest that ferric iron, if present in groundwater, is being utilized by microbes in the plume area.

Copyright 2009, Kleinfelder

- Sulfate. After DO, nitrate and available iron have been depleted, sulfate may be used as an electron acceptor. Sulfate was reported at 77 mg/L in groundwater within the plume and at 180 to 240 mg/L upgradient and elsewhere. No sulfite was reported in the samples. The lower sulfate concentration in groundwater within the plume suggests sulfate may be used by microbes in biological degradation of the fuel hydrocarbons.

- ORP. Low ORP is an indication of reducing conditions and the potential for methanogenesis. The low ORP in groundwater at MW-2 (-86.4 mV) as opposed to elsewhere (57.5 to 105 mV) is indicative of biologically mediated degradation.

Collectively the data are consistent with biologically mediated breakdown of petroleum hydrocarbons in the source area (vicinity of MW-2). As groundwater migrating into the source contains sufficient DO and other inorganic compounds that can be used by microbes as electron acceptors, biological breakdown should continue in, and in the vicinity of, the source area. This process should continue to limit the overall extent of ground ware impacts.

Copyright 2009, Kleinfelder

8 CONCLUSIONS AND RECOMMENDATIONS

Based on the results of this site investigation performed at the site and on Kleinfelder's review of previous reports provided by Caltrans and from regulatory agency file reviews, it is Kleinfelder's opinion that the hydrocarbons detected in soil and groundwater from DP-5 and groundwater from MW-2, at the site originated from the former Mahoney's Flying A Service and Gas Station that previously occupied the western corner of the site. The groundwater plume from the former service station appears stable given that no primary sources have been found, evidence for active biological degradation is present, and its relative age and limited extent.

No discrete sources (e.g. USTs) have been found, however numerous buried pipelines, which may include former product pipelines, are present in the subsurface in the vicinity of the former service station. The extent of impacts is generally defined, however further investigation can better define the extent impacts on the site for remedial purposes (risk assessment and/or removal or reduction of secondary source materials and potential risks).

Kleinfelder makes the following recommendations:

- Forward a copy of this report to the Alameda County Environmental Health Services Agency.
- Advance soil borings in the vicinity of OAK7 and OAK-2 in order to better define the lateral extent of impacted groundwater and the petroleum stained soil encountered in trenches T-E1, T-E1-Ext, and T-E2 and MW-2.
- Excavate the pipes encountered in trenches T-B, T-C, and T-E2.
- Assess residual risks at the site and prepare a corrective measures plan, as appropriate.

Copyright 2009, Kleinfelder

9 LIMITATIONS

This work was performed in a manner consistent with that level of care and skill ordinarily exercised by other members of Kleinfelder's profession practicing in the same locality, under similar conditions and at the date the services are provided. Our conclusions, opinions, and recommendations are based on a limited number of observations and data. It is possible that conditions could vary between or beyond the data evaluated. Kleinfelder makes no other representation, guarantee, or warranty, express or implied, regarding the services, communication (oral or written), report, opinion, or instrument of service provided.

This report may be used only by Caltrans and the registered design professional in responsible charge and only for the purposes stated for this specific engagement within a reasonable time from its issuance, but in no event later than two (2) years from the date of the report.

The work performed was based on project information provided by Caltrans. If Caltrans does not retain Kleinfelder to review any plans and specifications, including any revisions or modifications to the plans and specifications, Kleinfelder assumes no responsibility for the suitability of our recommendations. In addition, if there are any changes in the field to the plans and specifications, Caltrans must obtain written approval from Kleinfelder's engineer that such changes do not affect our recommendations. Failure to do so will vitiate Kleinfelder's recommendations.

Kleinfelder offers various levels of investigative and engineering services to suit the varying needs of different clients. It should be recognized that definition and evaluation of geologic and environmental conditions are a difficult and inexact science. Judgments leading to conclusions and recommendations are generally made with incomplete knowledge of the subsurface conditions present due to the limitations of data from field studies. Although risk can never be eliminated, more-detailed and extensive studies yield more information, which may help understand and manage the level of risk. Since detailed study and analysis involves greater expense, our clients participate in determining levels of service that provide adequate information for their purposes at acceptable levels of risk. More extensive studies, including subsurface studies or field tests, should be performed to reduce uncertainties. Acceptance of this report will

Copyright 2009, Kleinfelder

indicate that Caltrans has reviewed the document and determined that it does not need or want a greater level of service than provided.

During the course of the performance of Kleinfelder's services, hazardous materials may have been discovered. Kleinfelder assumes no responsibility or liability whatsoever for any claim, loss of property value, damage, or injury that results from pre-existing hazardous materials being encountered or present on the project site, or from the discovery of such hazardous materials. Nothing contained in this report should be construed or interpreted as requiring Kleinfelder to assume the status of an owner, operator, or generator, or person who arranges for disposal, transport, storage, or treatment of hazardous materials within the meaning of any governmental statute, regulation, or order. Caltrans is solely responsible for directing notification of all governmental agencies, and the public at large, of the existence, release, treatment, or disposal of any hazardous materials observed at the project site, either before or during performance of Kleinfelder's services. Caltrans is responsible for directing all arrangements to lawfully store, treat, recycle, dispose, or otherwise handle hazardous materials, including cuttings and samples resulting from Kleinfelder's services.

Copyright 2009, Kleinfelder

10 REFERENCES

California Regional Water Quality Control Board – San Francisco Bay Region, 2007. *Screening for Environmental Concerns at Sites with Contaminated Soil and Groundwater, Volume 1: Summary Tier 1 Lookup Tables*.

Caltrans. 2002. Vacant Parcel Located at the Intersection of 6th and Castro Streets, Oakland, CA. Letter to Mr. Don Hwang, Alameda County Environmental Health Department. July 18.

Engeo Incorporated (Engeo), 1993. Phase I Environmental Site Assessment, Sixth Street and Castro Street Parcel, Oakland, California. January 27.

ERM-West, 2001. Site Investigation Workplan, California Department of Transportation District 4 Excess Land, Sixth and Castro Street, Oakland, California. August 6.

Geocon, Incorporated (Geocon), 1995. Summary of Soil and Groundwater Results, Caltrans District 4 Excess Land, Oakland, CA, October 9.

International Technology Corporation (ITC), 1996. Boring Logs and Locations and Detected Analytes in Soil and Groundwater, Oakland Site, Sixth Street and Castro Street. October 15.

Kleinfelder 2008 Site Investigation Work Plan, Caltrans Property, Sixth Street and Castro Street. Oakland, California. May 30.

Lawrence Berkeley National Laboratory, 1995. *LBNL Environmental Restoration Program*, 1995.

Norcal Geophysical Consultants, Inc. (Norcal), 1995. Geophysical Survey Investigation, letter report included as appendix in Geocon (1995) report.

PSI, 1999. Summary of Groundwater Analytical Data, State Right-of-Way, Sixth and Castro Streets, Oakland, California. October 25.

PSI, 2000a. Summary of Groundwater Analytical Data, State Right-of-Way, Sixth and Castro Streets, Oakland, California. February 7.

PSI, 2000b. Summary of Groundwater Analytical Data, State Right-of-Way, Sixth and Castro Streets, Oakland, California. April 27.

PSI, 2000c. Summary of Groundwater Analytical Data, State Right-of-Way, Sixth and Castro Streets, Oakland, California. August 8.

Copyright 2009, Kleinfelder

PSI, 2000d. Summary of Groundwater Analytical Data, State Right-of-Way, Sixth and Castro Streets, Oakland, California. November 16.

PSI, 2001. Summary of Groundwater Analytical Data, State Right-of-Way, Sixth and Castro Streets, Oakland, California. March 27.

Shacklette, H.T., Boerngen, J.G., 1984. *Element concentrations in soils and other surficial materials of the conterminous United States.* United States Geological Survey Professional Paper 1270.

U.S. EPA. 1996. Test Methods for Evaluating Solid Waste, Physical/Chemical Methods (SW-846), Update III. Office of Solid Waste and Emergency Response. Washington DC. December.

Wiedemeier, T., Wilson, J. T., Kampbell, D.H., Mill, R.N., and Hansen, J.E., 1995, Technical Protocol for Implementing Intrinsic Remediation with Long-Term Monitoring for Natural Attenuation of Fuel Contamination Dissolved in Groundwater, Volume 1, Air Force Center for Environmental Excellence, Technology Transfer Division, Brooks AFB, San Antonio, Texas.

Copyright 2009, Kleinfelder

TABLES

TABLE 1
WELL CONSTRUCTION DETAILS AND GROUNDWATER ELEVATIONS
CALTRANS PROPERTY
SIXTH STREET AND CASTRO STREET
OAKLAND, CALIFORNIA

Well ID	Date Installed	Borehole Diameter (inches)	Casing Diameter and Materials	Total Well Depth (feet)	Screened Interval (feet)	Sand Interval (feet)	Bentonite Seal Interval (feet)	Top of Casing Elevation (feet msl) [1]
MW-4	9/3/2008	8	2-inch Sch 40 PVC	23	13-23	11-23	9-11	26.30
MW-5	4/9/2008	8	2-inch Sch 40 PVC	23	13-23	11-23	9-11	24.71
MW-6	4/9/2008	8	2-inch Sch 40 PVC	23	13-23	11-23	9-11	24.26
MW-7	4/9/2008	8	2-inch Sch 40 PVC	23	13-23	11-23	9-11	24.91

Notes:
[1] Top of casing elevation reported in feet above mean sea level, measured by Mid Coast Engineers on September 24, 2008.

© 2008 Kleinfelder

Table 2
GROUNDWATER ELEVATION: SEPTEMBER 2008
CALTRANS PROPERTY
SIXTH STREET AND CASTRO STREET
OAKLAND, CALIFORNIA

	Reference Elevation[1] (TOC) (feet)	Depth to Groundwater (feet bgs)	Groundwater Elevation (feet)
Well Number Date Measured			
MW-1 09/16/08	30.12	20.80	9.32
MW-2 09/16/08	24.27	15.48	8.79
MW-3 09/16/08	24.76	15.92	8.84
MW-4 09/16/08	26.30	17.29	9.01
MW-5 09/16/08	24.71	15.87	8.84
MW-6 09/16/08	24.26	15.74	8.52
MW-7 09/16/08	24.91	16.42	8.49

Notes:
TOC - top of casing
bgs - below ground surface
(1) Wells MW-1 through MW-7, were surveyed September 24, 2008, by Mid Coast Engineers.

Copyright 2008 Kleinfelder

TABLE 3
SUMMARY OF SOIL ANALYTICAL RESULTS
CALTRANS PROPERTY
SIXTH STREET AND CASTRO STREET
OAKLAND, CALIFORNIA

		Sample ID and Date							
Analyte (mg/kg)	**Method**	**DP-1-14 9/2/2008 Depth: 14 feet**	**DP-2-13 9/2/2008 Depth: 13 feet**	**DP-3-12 9/2/2008 Depth: 12 feet**	**DP-4-12 9/2/2008 Depth: 12 feet**	**DP-5-6 9/3/2008 Depth: 6 feet**	**DP-5-12 9/3/2008 Depth: 12 feet**	**MW-4-14 9/3/2008 Depth: 14 feet**	**MW-5-12 9/4/2008 Depth: 12 feet**
Volatile Organic Compounds	8260B								
Benzene		ND(0.010)	ND(0.010)	ND(0.010)	ND(0.010)	ND(0.010)	ND(20)	ND(0.010)	ND(0.010)
Toluene		ND(0.010)	ND(0.010)	ND(0.010)	ND(0.010)	ND(0.010)	ND(20)	ND(0.010)	ND(0.010)
Ethylbenzene		ND(0.010)	ND(0.010)	ND(0.010)	ND(0.010)	ND(0.010)	97.0	ND(0.010)	ND(0.010)
Total Xylenes		ND(0.015)	ND(0.015)	ND(0.015)	ND(0.015)	ND(0.015)	500	ND(0.015)	ND(0.015)
Tetrachloroethylene(PCE)		ND(0.010)	ND(0.010)	ND(0.010)	ND(0.010)	ND(0.010)	ND(20)	ND(0.010)	ND(0.010)
Trichloroethylene (TCE)		ND(0.010)	ND(0.010)	ND(0.010)	ND(0.010)	ND(0.010)	ND(20)	ND(0.010)	ND(0.010)
1,2,4-Trimethylbenzene		ND(0.010)	ND(0.010)	ND(0.010)	ND(0.010)	ND(0.010)	470	ND(0.010)	ND(0.010)
1,3,5-Trimethylbenzene		ND(0.010)	ND(0.010)	ND(0.010)	ND(0.010)	ND(0.010)	140	ND(0.010)	ND(0.010)
4-Isopropyltoluene		ND(0.010)	ND(0.010)	ND(0.010)	ND(0.010)	ND(0.010)	ND(20)	ND(0.010)	ND(0.010)
Naphthalene		ND(0.020)	ND(0.020)	ND(0.020)	ND(0.020)	ND(0.020)	140	ND(0.020)	ND(0.020)
n-Butyl benzene		ND(0.010)	ND(0.010)	ND(0.010)	ND(0.010)	ND(0.010)	35.0	ND(0.010)	ND(0.010)
n-Propyl benzene		ND(0.010)	ND(0.010)	ND(0.010)	ND(0.010)	ND(0.010)	53.0	ND(0.010)	ND(0.010)
Semi-Volatile Organic Compounds	8270C								
		NA	NA	NA	NA	NA	NA	NA	NA
Petroleum Hydrocarbons	8015C								
TPH-Gasoline		ND(0.100)	ND(0.100)	ND(0.100)	ND(0.100)	ND(0.100)	1300[(3)]	ND(0.100)	ND(0.100)
TPH-Diesel		ND(2.00)	ND(2.00)	ND(2.00)	ND(2.00)	ND(2.00)	588[(4)]	ND(2.00)	ND(2.00)

© 2008 Kleinfelder

TABLE 3
SUMMARY OF SOIL ANALYTICAL RESULTS
CALTRANS PROPERTY
SIXTH STREET AND CASTRO STREET
OAKLAND, CALIFORNIA

	Sample ID and Date								
Analyte (mg/kg)	**MW-6-12 9/3/2008 Depth: 12 feet**	**MW-7-13 9/3/2008 Depth: 13 feet**	**T-E2-1-8 9/22/2008 Depth: 8 feet**	**T-E2-2-3 9/22/2008 Depth: 3 feet**	**T-E1-2-8 9/23/2008 Depth: 8 feet**	**T-E1-3-8 9/23/2008 Depth: 8 feet**	**T-A-2-2 9/23/2008 Depth: 2 feet**	**T-C-2-4 9/23/2008 Depth: 4 feet**	**T-B-2-3 9/23/2008 Depth: 3 feet**
Volatile Organic Compounds									
Benzene	ND(0.010)	ND(0.010)	ND(0.010)	NA	ND(0.050)	ND(0.010)	NA	NA	NA
Toluene	ND(0.010)	ND(0.010)	ND(0.010)	NA	ND(0.050)	ND(0.010)	NA	NA	NA
Ethylbenzene	ND(0.010)	ND(0.010)	ND(0.010)	NA	0.063	ND(0.010)	NA	NA	NA
Total Xylenes	ND(0.015)	ND(0.015)	ND(0.015)	NA	0.290	ND(0.015)	NA	NA	NA
Tetrachloroethylene(PCE)	ND(0.010)	ND(0.010)	ND(0.010)	NA	ND(0.050)	ND(0.010)	NA	NA	NA
Trichloroethylene (TCE)	ND(0.010)	ND(0.010)	ND(0.010)	NA	ND(0.050)	ND(0.010)	NA	NA	NA
1,2,4-Trimethylbenzene	ND(0.010)	ND(0.010)	ND(0.010)	NA	1.00	0.033	NA	NA	NA
1,3,5-Trimethylbenzene	ND(0.010)	ND(0.010)	ND(0.010)	NA	0.380	ND(0.010)	NA	NA	NA
4-Isopropyltoluene	ND(0.010)	ND(0.010)	ND(0.010)	NA	0.063	ND(0.010)	NA	NA	NA
Naphthalene	ND(0.020)	ND(0.020)	ND(0.020)	NA	ND(0.100)	ND(0.020)	NA	NA	NA
n-Butyl benzene	ND(0.010)	ND(0.010)	ND(0.010)	NA	0.230	ND(0.010)	NA	NA	NA
n-Propyl benzene	ND(0.010)	ND(0.010)	ND(0.010)	NA	0.095	ND(0.010)	NA	NA	NA
Semi-Volatile Organic Compounds									
	NA	NA	ND(0.330-6.66)	NA	ND(0.330-6.66)	ND(0.330-6.66)	NA	NA	NA
Petroleum Hydrocarbons									
TPH-Gasoline	ND(0.100)	ND(0.100)	0.29	NA	3.5	0.17	NA	NA	NA
TPH-Diesel	ND(2.00)	ND(2.00)	ND(2.00)	NA	30.1	ND(2.00)	NA	NA	NA

© 2008 Kleinfelder

TABLE 3
SUMMARY OF SOIL ANALYTICAL RESULTS
CALTRANS PROPERTY
SIXTH STREET AND CASTRO STREET
OAKLAND, CALIFORNIA

	Sample ID and Date						RWQCB ESLs[1]		RWQCB ESLs[2]	
Analyte (mg/kg)	**T-D3-2-4 9/23/2008 Depth: 4 feet**	**Composite T-E1 (1A-1D) 9/23/2008**	**Composite T-A (1A-1C) 9/23/2008**	**Composite T-C (1A-1D) 9/23/2008**	**Composite T-B (1A-1D) 9/23/2008**	**Composite T-D3 (1A-1D) 9/23/2008**	**Residential Land Use**	**Commercial / Industrial Land Use**	**Residential Land Use**	**Commercial / Industrial Land Use**
Volatile Organic Compounds										
Benzene	NA	ND(0.010)	ND(0.010)	ND(0.010)	ND(0.010)	ND(0.010)	0.044	0.044	0.044	0.044
Toluene	NA	ND(0.010)	ND(0.010)	ND(0.010)	ND(0.010)	ND(0.010)	2.9	2.9	2.9	2.9
Ethylbenzene	NA	ND(0.010)	ND(0.010)	ND(0.010)	ND(0.010)	ND(0.010)	2.3	3.3	3.3	3.3
Total Xylenes	NA	ND(0.015)	ND(0.015)	ND(0.015)	ND(0.015)	ND(0.015)	2.3	2.3	2.3	2.3
Tetrachloroethylene(PCE)	NA	ND(0.010)	ND(0.010)	ND(0.010)	ND(0.010)	ND(0.010)	0.37	0.70	0.70	0.70
Trichloroethylene (TCE)	NA	ND(0.010)	ND(0.010)	ND(0.010)	ND(0.010)	ND(0.010)	0.46	0.46	0.46	0.46
1,2,4-Trimethylbenzene	NA	ND(0.010)	ND(0.010)	ND(0.010)	ND(0.010)	ND(0.010)	NE	NE	NE	NE
1,3,5-Trimethylbenzene	NA	ND(0.010)	ND(0.010)	ND(0.010)	ND(0.010)	ND(0.010)	NE	NE	NE	NE
4-Isopropyltoluene	NA	ND(0.010)	ND(0.010)	ND(0.010)	ND(0.010)	ND(0.010)	NE	NE	NE	NE
Naphthalene	NA	ND(0.020)	ND(0.020)	ND(0.020)	ND(0.020)	ND(0.020)	1.3	2.8	3.4	3.4
n-Butyl benzene	NA	ND(0.010)	ND(0.010)	ND(0.010)	ND(0.010)	ND(0.010)	NE	NE	NE	NE
n-Propyl benzene	NA	ND(0.010)	ND(0.010)	ND(0.010)	ND(0.010)	ND(0.010)	NE	NE	NE	NE
Semi-Volatile Organic Compounds										
	NA	ND(0.330-6.66)	ND(0.330-6.66)	ND(0.330-6.66)	ND(0.330-6.66)	ND(0.330-6.66)				
Petroleum Hydrocarbons										
TPH-Gasoline	NA	ND(0.100)	ND(0.100)	ND(0.100)	ND(0.100)	ND(0.100)	83	83	83	83
TPH-Diesel	NA	ND(2.00)	ND(2.00)	ND(2.00)	ND(2.00)	ND(2.00)	83	83	83	83

© 2008 Kleinfelder

TABLE 3
SUMMARY OF SOIL ANALYTICAL RESULTS
CALTRANS PROPERTY
SIXTH STREET AND CASTRO STREET
OAKLAND, CALIFORNIA

		Sample ID and Date							
Analyte (mg/kg)	**Method**	**DP-1-14 9/2/2008 Depth: 14 feet**	**DP-2-13 9/2/2008 Depth: 13 feet**	**DP-3-12 9/2/2008 Depth: 12 feet**	**DP-4-12 9/2/2008 Depth: 12 feet**	**DP-5-6 9/3/2008 Depth: 6 feet**	**DP-5-12 9/3/2008 Depth: 12 feet**	**MW-4-14 9/3/2008 Depth: 14 feet**	**MW-5-12 9/4/2008 Depth: 12 feet**
Pesticides									
4,4-DDT		NA	NA	NA	NA	NA	NA	NA	NA
Polychlorinated Biphenyls									
		NA	NA	NA	NA	NA	NA	NA	NA
CAM 17 (Title 22) Metals	6010B								
Antimony		NA	NA	NA	NA	NA	NA	NA	NA
Arsenic		NA	NA	NA	NA	NA	NA	NA	NA
Barium		NA	NA	NA	NA	NA	NA	NA	NA
Beryllium		NA	NA	NA	NA	NA	NA	NA	NA
Cadmium		NA	NA	NA	NA	NA	NA	NA	NA
Total Chromium		NA	NA	NA	NA	NA	NA	NA	NA
Cobalt		NA	NA	NA	NA	NA	NA	NA	NA
Copper		NA	NA	NA	NA	NA	NA	NA	NA
Lead		NA	NA	NA	NA	NA	NA	NA	NA
Mercury		NA	NA	NA	NA	NA	NA	NA	NA
Molybdenum		NA	NA	NA	NA	NA	NA	NA	NA
Nickel		NA	NA	NA	NA	NA	NA	NA	NA
Selenium		NA	NA	NA	NA	NA	NA	NA	NA
Silver		NA	NA	NA	NA	NA	NA	NA	NA
Thallium		NA	NA	NA	NA	NA	NA	NA	NA
Vanadium		NA	NA	NA	NA	NA	NA	NA	NA
Zinc		NA	NA	NA	NA	NA	NA	NA	NA

© 2008 Kleinfelder

TABLE 3
SUMMARY OF SOIL ANALYTICAL RESULTS
CALTRANS PROPERTY
SIXTH STREET AND CASTRO STREET
OAKLAND, CALIFORNIA

	Sample ID and Date								
Analyte (mg/kg)	**MW-6-12 9/3/2008 Depth: 12 feet**	**MW-7-13 9/3/2008 Depth: 13 feet**	**T-E2-1-8 9/22/2008 Depth: 8 feet**	**T-E2-2-3 9/22/2008 Depth: 3 feet**	**T-E1-2-8 9/23/2008 Depth: 8 feet**	**T-E1-3-8 9/23/2008 Depth: 8 feet**	**T-A-2-2 9/23/2008 Depth: 2 feet**	**T-C-2-4 9/23/2008 Depth: 4 feet**	**T-B-2-3 9/23/2008 Depth: 3 feet**
Pesticides									
4,4-DDT	NA	NA	NA	ND(0.002)	NA	NA	ND(0.002)	ND(0.002)	ND(0.002)
Polychlorinated Biphenyls									
	NA	NA	NA	ND(0.100-0.200)	NA	NA	ND(0.100-0.200)	ND(0.100-0.200)	ND(0.100-0.200)
CAM 17 (Title 22) Metals									
Antimony	NA	NA	ND(5.0)	NA	ND (5.0)	ND(5.0)	NA	NA	NA
Arsenic	NA	NA	ND(1.7)	NA	1.7	1.8	NA	NA	NA
Barium	NA	NA	62	NA	46	52	NA	NA	NA
Beryllium	NA	NA	ND(2.0)	NA	ND(2.0)	ND(2.0)	NA	NA	NA
Cadmium	NA	NA	ND(1.0)	NA	ND(1.0)	ND(1.0)	NA	NA	NA
Total Chromium	NA	NA	34	NA	33	34	NA	NA	NA
Cobalt	NA	NA	6.0	NA	5.4	6.1	NA	NA	NA
Copper	NA	NA	7.0	NA	6.8	6.3	NA	NA	NA
Lead	NA	NA	4.2	NA	4.6	2.9	NA	NA	NA
Mercury	NA	NA	ND(0.10)	NA	ND(0.10)	ND(0.10)	NA	NA	NA
Molybdenum	NA	NA	ND(5.0)	NA	ND(5.0)	ND(5.0)	NA	NA	NA
Nickel	NA	NA	31	NA	30	28	NA	NA	NA
Selenium	NA	NA	ND(5.0)	NA	ND(5.0)	ND(5.0)	NA	NA	NA
Silver	NA	NA	1.1	NA	ND(1.0)	1.1	NA	NA	NA
Thallium	NA	NA	ND(5.0)	NA	ND(5.0)	ND(5.0)	NA	NA	NA
Vanadium	NA	NA	27	NA	29	26	NA	NA	NA
Zinc	NA	NA	19	NA	19	17	NA	NA	NA

© 2008 Kleinfelder

TABLE 3
SUMMARY OF SOIL ANALYTICAL RESULTS
CALTRANS PROPERTY
SIXTH STREET AND CASTRO STREET
OAKLAND, CALIFORNIA

	Sample ID and Date						RWQCB ESLs[1]		RWQCB ESLs[2]	
Analyte (mg/kg)	**T-D3-2-4 9/23/2008 Depth: 4 feet**	**Composite T-E1 (1A-1D) 9/23/2008**	**Composite T-A (1A-1C) 9/23/2008**	**Composite T-C (1A-1D) 9/23/2008**	**Composite T-B (1A-1D) 9/23/2008**	**Composite T-D3 (1A-1D) 9/23/2008**	**Residential Land Use**	**Commercial / Industrial Land Use**	**Residential Land Use**	**Commercial / Industrial Land Use**
Pesticides										
4,4-DDT	0.00375	NA	NA	NA	NA	NA	1.7	4.0	4.3	4.3
Polychlorinated Biphenyls										
	ND(0.100-0.200)	NA	NA	NA	NA	NA				
CAM 17 (Title 22) Metals										
Antimony	NA	ND(5.0)	ND(5.0)	ND(5.0)	ND(5.0)	ND(5.0)	6.3	40	310	310
Arsenic	NA	ND(1.7)	2.1	1.8	1.8	ND(1.7)	**0.39**	**1.6**	**15**	**15**
Barium	NA	48	50	49	46	46	750	1500	2,500	2,600
Beryllium	NA	ND(2.0)	ND(2.0)	ND(2.0)	ND(2.0)	ND(2.0)	4.0	8.0	98	98
Cadmium	NA	ND(1.0)	ND(1.0)	ND(1.0)	ND(1.0)	ND(1.0)	1.7	7.4	39	39
Total Chromium	NA	33	37	36	33	34	NE	NE	2,500	5,000
Cobalt	NA	ND(5.0)	5.7	5.2	ND(5.0)	5.3	40	80	94	94
Copper	NA	5.6	5.7	5.6	5.2	5.2	230	230	2,500	5,000
Lead	NA	2.6	3.4	2.6	3.4	2.6	200	750	750	750
Mercury	NA	ND(0.10)	ND(0.10)	ND(0.10)	ND(0.10)	ND(0.10)	1.3	10	58	58
Molybdenum	NA	ND(5.0)	ND(5.0)	ND(5.0)	ND(5.0)	ND(5.0)	40	40	2,500	3,900
Nickel	NA	25	27	28	21	26	150	150	260	260
Selenium	NA	ND(5.0)	ND(5.0)	ND(5.0)	ND(5.0)	ND(5.0)	10	10	2,500	3,900
Silver	NA	ND(1.0)	1.0	ND(1.0)	ND(1.0)	ND(1.0)	20	40	2,500	3,900
Thallium	NA	ND(5.0)	ND(5.0)	ND(5.0)	ND(5.0)	ND(5.0)	1.3	16	62	62
Vanadium	NA	25	30	27	23	25	**16**	200	770	770
Zinc	NA	16	17	18	16	16	600	600	2,500	5,000

© 2008 Kleinfelder

TABLE 3
SUMMARY OF SOIL ANALYTICAL RESULTS
CALTRANS PROPERTY
SIXTH STREET AND CASTRO STREET
OAKLAND, CALIFORNIA

Notes:

Samples were analyzed by Torrent Laboratory, Inc. of Milpitas, California, a state-certified analytical laboratory.
Laboratory data met EPA and laboratory specifications for quality assurance and quality control.

[1] California Regional Water Quality Control Board, San Francisco Bay Region.*Screening For Environmental Concerns at Sites with Contaminated Soil and Groundwater, Volume 1: Summary Tier 1 Lookup Tables, Shallow Soils, Groundwater is a Current or Potential Source of Drinking Water*, Interim Final, November 2007 (Updated May 2008).

[2] California Regional Water Quality Control Board, San Francisco Bay Region.*Screening For Environmental Concerns at Sites with Contaminated Soil and Groundwater, Volume 1: Summary Tier 1 Lookup Tables, Deep Soils, Groundwater is a Current or Potential Source of Drinking Water*, Interim Final, November 2007 (Updated May 2008).

[3] Estimated value. The amount exceeds the calibration range but within linear working range for the instrument.

[4] Sample chromatograph does not resemble typical diesel pattern (possibly two fuels present: one fuel lighter than diesel and the other fuel being diesel) Hydrocarbons within the diesel range quantitated as diesel.

Acronyms/Abbreviations:

mg/kg - milligrams per kilogram
TPH - Total Petroleum Hydrocarbons
ESLs - Environmental Screening Levels
RWQCB - Regional Water Quality Control Board (San Francisco Bay Region)
ND - Not detected at or above laboratory reporting limit (Laboratory reporting limit in parentheses)
NE - Not established
NA - Not analyzed

© 2008 Kleinfelder

Table 4
SUMMARY OF GROUNDWATER ANALYTICAL RESULTS (GRAB SAMPLES)
CALTRANS PROPERTY
SIXTH STREET AND CASTRO STREET
OAKLAND, CALIFORNIA

	Method	8015B		8260B												
		TPH Gasoline	**TPH Diesel**	**Benzene**	**Ethylbenzene**	**Toluene**	**Xylenes**	**1,2,4-Trimethylbenzene**	**1,2-Dichloroethane (EDC)**	**1,3,5-Trimethylbenzene**	**4-Isopropyltoluene**	**Isopropylbenzene**	**Naphthalene**	**n-Butylbenzene**	**n-Propylbenzene**	**sec-Butylbenzene**
	Units	**(µg/L)**	**(µg/L)**	**(µg/L)**	**(µg/L)**	**(µg/L)**	**(µg/L)**	**(µg/L)**	**(µg/L)**	**(µg/L)**	**(µg/L)**	**(µg/L)**	**(µg/L)**	**(µg/L)**	**(µg/L)**	**(µg/L)**
Boring Number	**MCL[1]**	**NE**	**NE**	**1.0**	**300**	**150**	**1,750**	**NE**	**0.5**	**NE**	**NE**	**NE**	**NE**	**NE**	**NE**	**NE**
Date Sampled	**ESL[2]**	**100**	**100**	**1.0**	**30**	**40**	**20**	**NE**	**0.5**	**NE**	**NE**	**NE**	**17**	**NE**	**NE**	**NE**
DP-1 09/02/08		ND(73.5)	ND(129)	ND(0.61)	ND(0.61)	ND(0.61)	ND(1.83)	ND(0.61)	**31.7**	ND(0.61)	ND(0.61)	ND(1.22)	ND(7.32)	ND(0.61)	ND(0.61)	ND(0.61)
DP-2 09/02/08		ND(58.0)	ND(126)	ND(0.60)	ND(0.60)	ND(0.60)	ND(1.79)	ND(0.60)	ND(0.60)	ND(0.60)	ND(0.60)	ND(1.19)	ND(7.14)	ND(0.60)	ND(0.60)	ND(0.60)
DP-3 09/02/08		ND(59.5)	ND(123)	ND(0.50)	ND(0.50)	ND(0.50)	ND(1.50)	ND(0.50)	ND(0.50)	ND(0.50)	ND(0.50)	ND(1.00)	ND(6.00)	ND(0.50)	ND(0.50)	ND(0.50)
DP-4 09/02/08		ND(63)	ND(114)	ND(0.58)	ND(0.58)	ND(0.58)	ND(1.74)	ND(0.58)	ND(0.58)	ND(0.58)	ND(0.58)	ND(1.16)	ND(6.96)	ND(0.58)	ND(0.58)	ND(0.58)
DP-5 09/03/08		**11,900**	**2,410**	**69.8**	**615**	**263**	**3080**	882	**ND(4.40)**	291	21.1	34.8	**235**	35.0	151	13.0

Notes:
Samples were analyzed by Torrent Laboratory, Inc. of Milpitas, California, a state-certified analytical laboratory.
Laboratory data met EPA and laboratory specifications for quality assurance and quality control.
[1] Maximum Contaminant Levels and Regulatory Dates for Drinking Water, U.S. EPA vs. California,
[2] California Regional Water Quality Control Board, San Francisco Bay Region. *Screening For Environmental Concerns at Sites with Contaminated Soil and Groundwater, Volume 1: Summary Tier 1 Lookup Tables, Deep Soils, Groundwater is a Current or Potential Source of Drinking Water*, Interim Final, November 2007 (Updated May 2008).

Acronyms/Abbreviations:
- µg/L - micrograms per liter
- TPH - Total Petroleum Hydrocarbons
- ESLs - Environmental Screening Levels
- MCL - Maximum Contaminant Level
- RWQCB - Regional Water Quality Control Board (San Francisco Bay Region)
- ND - Not detected at or above laboratory reporting limit (Laboratory reporting limit in parentheses)
- NE - Not established

Copyright 2008 Kleinfelder

TABLE 5
SUMMARY OF GROUNDWATER ANALYTICAL DATA (MONITORING WELLS)
CALTRANS PROPERTY
SIXTH STREET AND CASTRO STREET
OAKLAND, CALIFORNIA

	Method	8260B	8015B	8260B											
		TPH Gasoline	**TPH Diesel**	**Benzene**	**Ethylbenzene**	**Toluene**	**Xylenes**	**1,2,4-Trimethylbenzene**	**1,3,5-Trimethylbenzene**	**1,2-Dichloroethane (EDC)**	**Isopropylbenzene**	**Naphthalene**	**n-Propyl benzene**	**Tetrachloroethene (PCE)**	**Trichloroethene (TCE)**
	Units	**(µg/L)**	**(µg/L)**	**(µg/L)**	**(µg/L)**	**(µg/L)**	**(µg/L)**	**(µg/L)**	**(µg/L)**	**(µg/L)**	**(µg/L)**	**(µg/L)**	**(µg/L)**	**(µg/L)**	**(µg/L)**
Well Number	**MCL[1]**	**NE**	**NE**	**1.0**	**300**	**150**	**1,750**	**NE**	**NE**	**0.5**	**NE**	**NE**	**NE**	**5.0**	**5.0**
Date Sampled	**ESL[2]**	**100**	**100**	**1.0**	**30**	**40**	**20**	**NE**	**NE**	**0.5**	**NE**	**17**	**NE**	**5.0**	**5.0**
MW-1															
09/16/08		ND(50)	ND(125)	ND(0.50)	ND(0.50)	ND(0.50)	ND(1.50)	ND(0.50)	ND(0.50)	ND(0.50)	ND(1.00)	ND(6.00)	ND(0.50)	ND(0.50)	ND(0.50)
MW-2															
09/16/08		47,000	2,800	**496**	**1,530**	**1,710**	**8,040**	2,120	410	**41.4**	66.0	1,050	270	ND(22.0)	ND(22.0)
09/16/08		57,000	3,030	**437**	**1,770**	**1,680**	**10,400**	4,250	859	**40.9**	112	3,500	547	ND(22.0)	ND(22.0)
MW-3															
09/16/08		ND(50)	ND(125)	ND(0.50)	ND(0.50)	ND(0.50)	ND(1.50)	ND(0.50)	ND(0.50)	ND(0.50)	ND(1.00)	ND(6.00)	ND(0.50)	ND(0.50)	ND(0.50)
MW-4															
09/16/08		ND(50)	ND(100)	ND(0.50)	ND(0.50)	ND(0.50)	ND(1.50)	ND(0.50)	ND(0.50)	ND(0.50)	ND(1.00)	ND(6.00)	ND(0.50)	ND(0.50)	0.92
MW-5															
09/16/08		ND(50.0)	ND(100)	ND(0.60)	ND(0.60)	ND(0.60)	ND(1.79)	ND(0.60)	ND(0.60)	ND(0.60)	ND(1.19)	ND(7.14)	ND(0.60)	ND(0.60)	ND(0.60)
MW-6															
09/16/08		ND(50.0)	ND(122)	ND(0.50)	ND(0.50)	ND(0.50)	ND(1.50)	ND(0.50)	ND(0.50)	ND(0.50)	ND(1.00)	ND(6.00)	ND(0.50)	3.94	ND(0.50)
MW-7															
09/16/08		ND(50)	ND(125)	ND(0.50)	ND(0.50)	ND(0.50)	ND(1.50)	ND(0.50)	ND(0.50)	ND(0.50)	ND(1.00)	ND(6.00)	ND(0.50)	ND(0.50)	ND(0.50)

Notes:
Samples were analyzed by Torrent Laboratory, Inc. of Milpitas, California, a state-certified analytical laboratory.
Laboratory data met EPA and laboratory specifications for quality assurance and quality control.

[1] Maximum Contaminant Levels and Regulatory Dates for Drinking Water, U.S. EPA vs. California,

[2] California Regional Water Quality Control Board, San Francisco Bay Region. *Screening For Environmental Concerns at Sites with Contaminated Soil and Groundwater, Volume 1: Summary Tier 1 Lookup Tables, Deep Soils, Groundwater is a Current or Potential Source of Drinking Water* , Interim Final, November 2007 (Updated May 2008).

Acronyms/Abbreviations:
- µg/L - micrograms per liter
- TPH - Total Petroleum Hydrocarbons
- ESLs - Environmental Screening Levels
- MCL - Maximum Contaminant Level
- RWQCB - Regional Water Quality Control Board (San Francisco Bay Region)
- ND - Not detected at or above laboratory reporting limit (Laboratory reporting limit in parentheses)
- NE - Not established

Copyright 2007 Kleinfelder

TABLE 6
BIOLOGICAL PARAMETERS- SUMMARY OF ANALYTICAL DATA
CALTRANS PROPERTY
SIXTH STREET AND CASTRO STREET
OAKLAND, CALIFORNIA

		Sample ID and Date						
Analyte[1]	**Method**	**MW-1 9/16/08**	**MW-2 9/16/08**	**MW-3 9/16/08**	**MW-4 9/16/08**	**MW-5 9/16/08**	**MW-6 9/16/08**	**MW-7 9/16/08**
Inorganic Ions (mg/L)	300.0							
Nitrate as N		NA	5.2	NA	20	2.4	NA	NA
Nitrite as N		NA	ND(0.50)	NA	ND(0.50)	ND(0.50)	NA	NA
Sulfate		NA	77	NA	180	240	NA	NA
Sulfite	377.1	NA	ND(2.0)	NA	ND(2.0)	ND(2.0)	NA	NA
Total Dissolved Solids (mg/L)	160.1	590	600	430	900	750	540	580
Ferrous Iron (mg/L)	SM3500-Fe B4c	NA	1.4	NA	ND(0.10)	ND(0.10)	NA	NA
Water Quality Parameters[2]								
Temperature (ºC)		NA	20.60	19.82	18.70	19.02	17.55	17.44
Conductivity (µS/cm)		NA	542	675	1201	875	799	975
Dissolved Oxygen (mg/L)		NA	0.77	1.00	0.87	1.09	1.19	0.53
pH		NA	6.60	6.41	6.85	6.57	6.81	6.87
Oxidation/Reduction Potential (m/V)		NA	-86.4	105.0	57.5	83.2	97.5	87.0

Notes:
[1] Samples were analyzed by Torrent Laboratory, Inc of Milpitas, California, a state-certified analytical laboratory.
[2] Water Quality Parameters Obtained on September 23, 2008 using down-hole YSI Model 556 MPS.
Laboratory data met EPA and laboratory specifications for quality assurance and quality control.

Acronyms/Abbreviations:
- mg/L - milligrams per liter
- m/V - millivolts
- µS/cm - micro Siemens per centimeter
- ºC - degrees Celsius
- NA - Not Analyzed

© 2008 Kleinfelder

PLATES

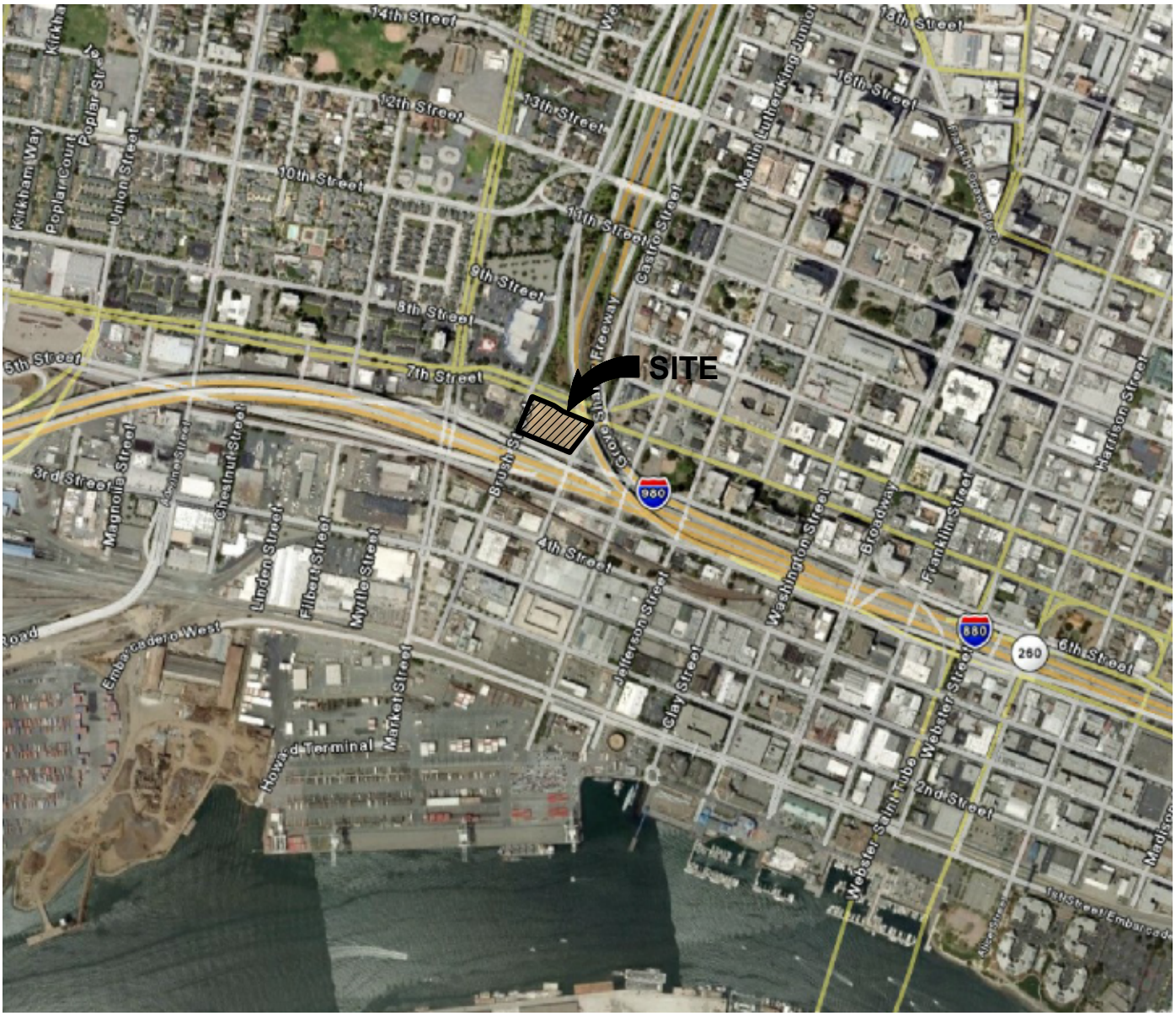

N

1000 500 0 1000

APPROXIMATE SCALE (feet)

REFERENCE:
www.google.com, 2006

The information included on this graphic representation has been compiled from a variety of sources and is subject to change without notice. Kleinfelder makes no representations or warranties, express or implied, as to accuracy, completeness, timeliness, or rights to the use of such information. This document is not intended for use as a land survey product nor is it designed or intended as a construction design document. The use or misuse of the information contained on this graphic representation is at the sole risk of the party using or misusing the information.

KLEINFELDER
Bright People. Right Solutions.
www.kleinfelder.com

PROJECT NO.	95539
DRAWN:	MAY 2008
DRAWN BY:	JDS
CHECKED BY:	CR
FILE NAME: GWS_Sept08.dwg	

SITE VICINITY MAP

CALTRANS DISTRICT 4 EXCESS LAND
SIXTH STREET AND CASTRO STREET
OAKLAND, CALIFORNIA

PLATE
1

PLOTTED: 18 Nov 2008, 2:00pm, Isue
ATTACHED IMAGES: Images: SITE-VIC.jpg Images: SITEPLAN.jpg
ATTACHED XREFS: XRef: Eng-A_8x11_P_StyleA: XRef: 08135 KLEIN: XRef: Eng-B_11x17_L_StyleA
PLEASANTON, CA CAD FILE: L:\2008\08Projects\95539\GRAPHICs\3\ LAYOUT: SITE-VIC

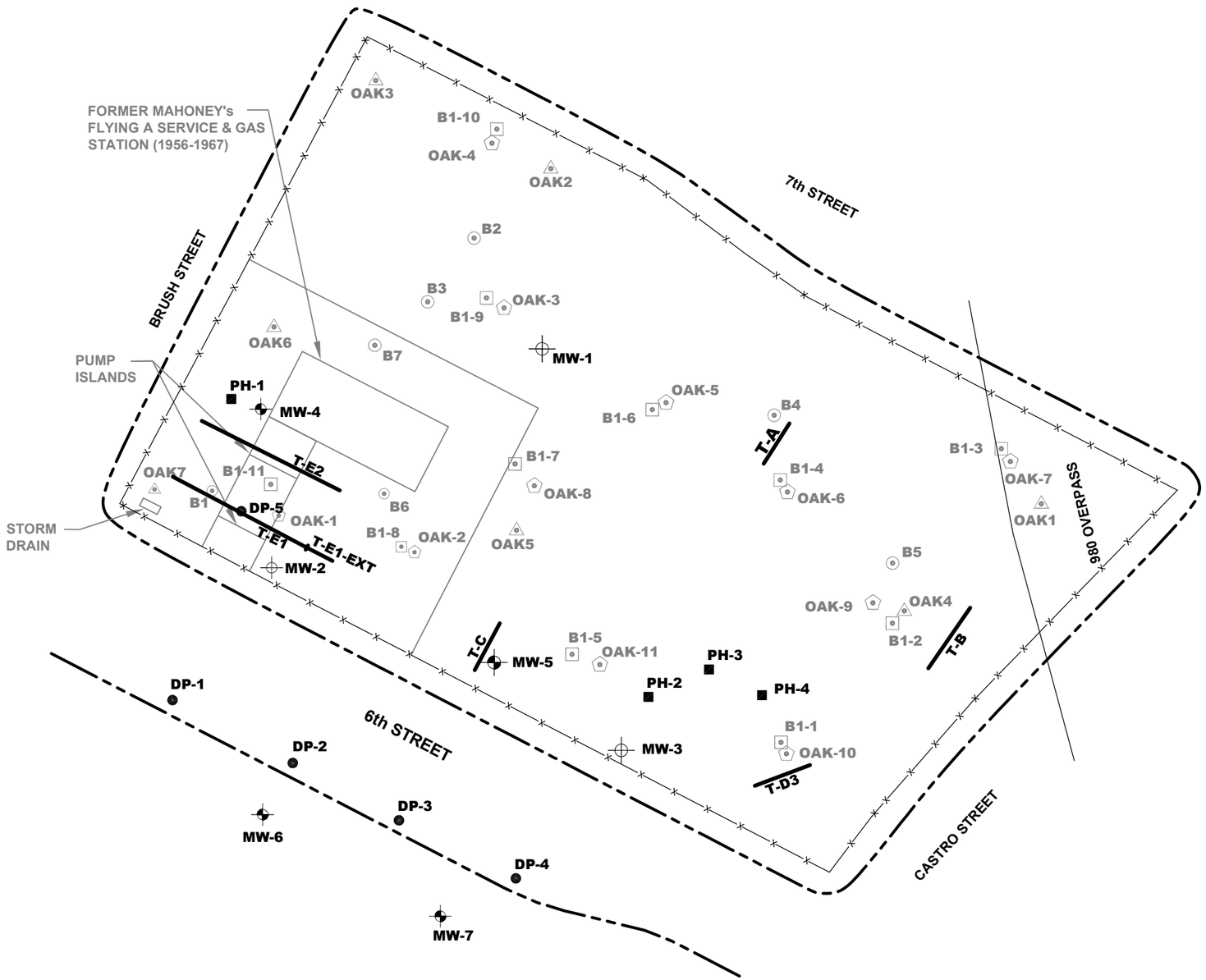

LEGEND

- CURB LINE
- FENCE LINE
- SOIL BORING LOCATION (ERM-WEST, 1987)
- SOIL BORING LOCATION (Geocon, 1995)
- SOIL BORING LOCATION (ITC, 1996)
- SOIL BORING LOCATION (PSI, 1999)
- MONITORING WELL LOCATION (PSI, 1999)
- POTHOLE EXCAVATED WITH BACKHOE (Kleinfelder, 2008)
- SOIL BORING LOCATION (Kleinfelder, 2008)
- SOIL BORING/MONITORING WELL LOCATION (Kleinfelder, 2008)
- TRENCHES

NOTE: Locations are approximate.

N

50 25 0 50

APPROXIMATE SCALE (feet)

REFERENCE:
Engeo Inc., Site Plan, dated January 1993
ERM, Site Plan, dated August, 2001

The information included on this graphic representation has been compiled from a variety of sources and is subject to change without notice. Kleinfelder makes no representations or warranties, express or implied, as to accuracy, completeness, timeliness, or rights to the use of such information. This document is not intended for use as a land survey product nor is it designed or intended as a construction design document. The use or misuse of the information contained on this graphic representation is at the sole risk of the party using or misusing the information.

KLEINFELDER
Bright People. Right Solutions.
www.kleinfelder.com

PROJECT NO.	95539
DRAWN:	NOV 2008
DRAWN BY:	JDS
CHECKED BY:	JG
FILE NAME:	GWS_Sept08.dwg

SITE PLAN

CALTRANS DISTRICT 4 EXCESS LAND
SIXTH STREET AND CASTRO STREET
OAKLAND, CALIFORNIA

PLATE **2**

PLOTTED: 18 Nov 2008, 2:00pm, Isue
ATTACHED IMAGES: Images: SITE-VIC.jpg Images: SITEPLAN.jpg
ATTACHED XREFS: XRef: Eng-A_8x11_P_StyleA: XRef: 08135 KLEIN: XRef: Eng-B_11x17_L_StyleA
CAD FILE: L:\2008\08Projects\95539\GRAPHICs\3\ LAYOUT: SITEPLAN

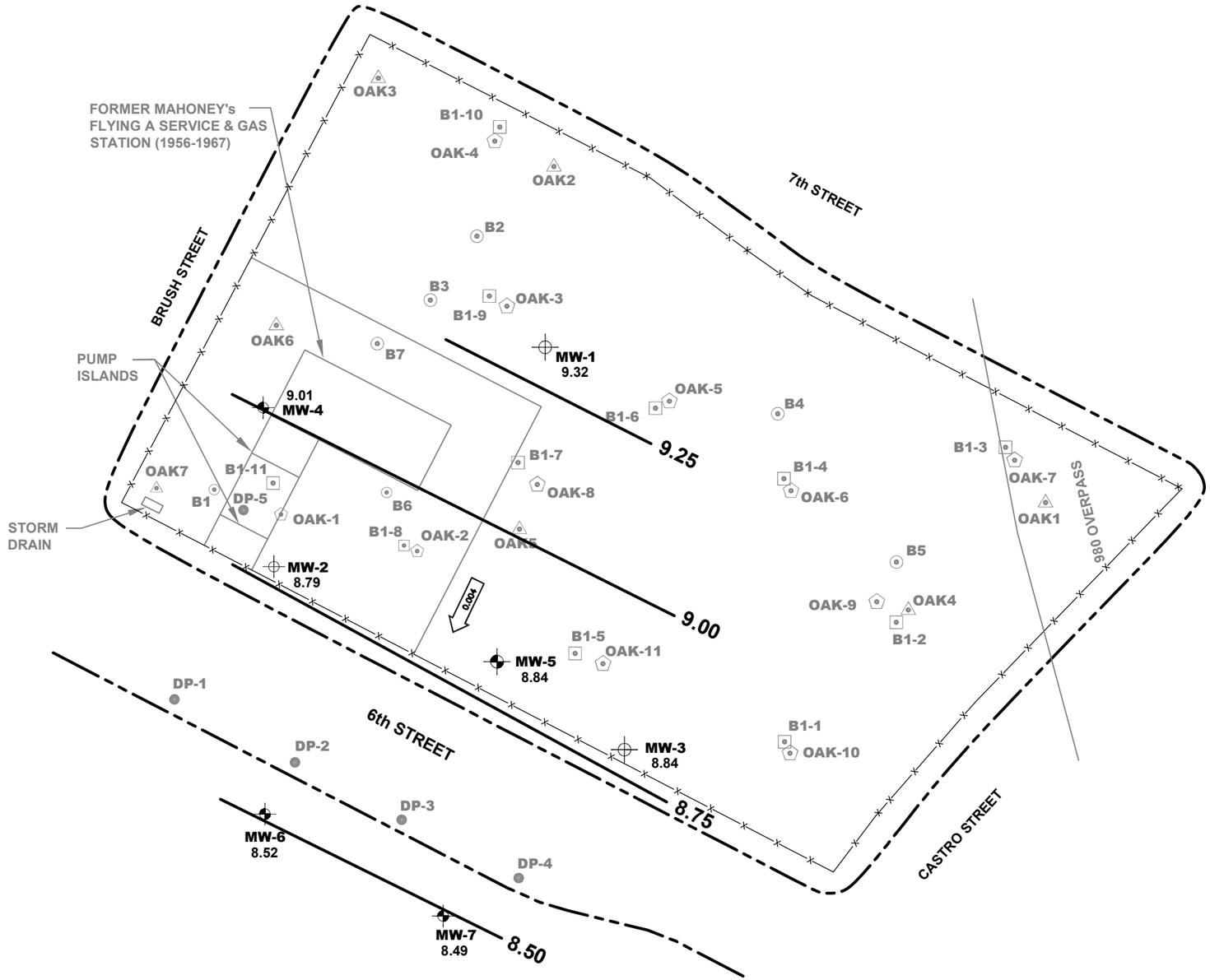

LEGEND

- CURB LINE
- FENCE LINE
- BORING LOCATION (ERM-WEST, 1987)
- BORING LOCATION (Geocon, 1995)
- BORING LOCATION (ITC, 1996)
- BORING LOCATION (PSI, 1999)
- WATER MONITORING WELL LOCATION (PSI, 1999)
- DIRECT PUSH SAMPLE LOCATION (Kleinfelder, 2008)
- SOIL BORING/MONITORING WELL LOCATION (Kleinfelder, 2008)
- 9.25 GROUNDWATER ELEVATION CONTOUR (feet, msl)
- 9.32 GROUNDWATER ELEVATION (feet, msl)
- 0.004 APPROXIMATE GROUNDWATER FLOW DIRECTION WITH GRADIENT

NOTES:

1. Contour lines are interpretive and represent interpolation between known data points.
2. Locations are approximate.

N

50 25 0 50

APPROXIMATE SCALE (feet)

REFERENCE:
Engeo Inc., Site Plan, dated January 1993
ERM, Site Plan, dated August, 2001

The information included on this graphic representation has been compiled from a variety of sources and is subject to change without notice. Kleinfelder makes no representations or warranties, express or implied, as to accuracy, completeness, timeliness, or rights to the use of such information. This document is not intended for use as a land survey product nor is it designed or intended as a construction design document. The use or misuse of the information contained on this graphic representation is at the sole risk of the party using or misusing the information.

KLEINFELDER
Bright People. Right Solutions.
www.kleinfelder.com

PROJECT NO.	95539
DRAWN:	OCT 2008
DRAWN BY:	JDS
CHECKED BY:	JG
FILE NAME:	GWS_Sept08.dwg

GROUNDWATER ELEVATION CONTOUR: SEPTEMBER, 2008

CALTRANS DISTRICT 4 EXCESS LAND
SIXTH STREET AND CASTRO STREET
OAKLAND, CALIFORNIA

PLATE
3

PLOTTED: 18 Nov 2008, 2:00pm, Isue
ATTACHED IMAGES: Images: SITE-VIC.jpg Images: SITEPLAN.jpg
ATTACHED XREFS: XRef: Eng-A_8x11_P_StyleA: XRef: 08135 KLEIN: XRef: Eng-B_11x17_L_StyleA
CAD FILE: L:\2008\08Projects\95539\GRAPHICs\3\ LAYOUT: GW-ELEVS

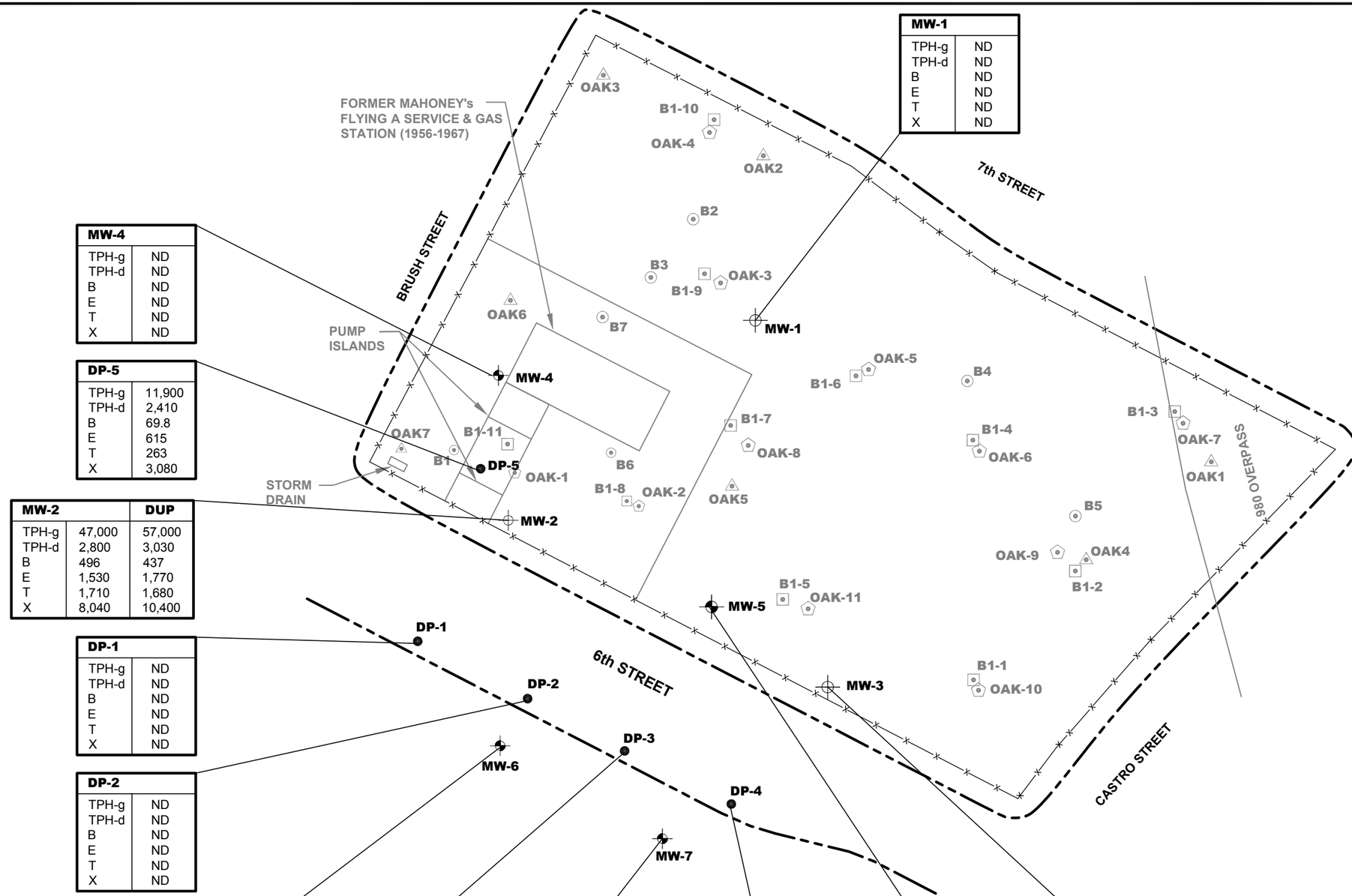

MW-1	
TPH-g	ND
TPH-d	ND
B	ND
E	ND
T	ND
X	ND

MW-4	
TPH-g	ND
TPH-d	ND
B	ND
E	ND
T	ND
X	ND

DP-5	
TPH-g	11,900
TPH-d	2,410
B	69.8
E	615
T	263
X	3,080

MW-2		DUP
TPH-g	47,000	57,000
TPH-d	2,800	3,030
B	496	437
E	1,530	1,770
T	1,710	1,680
X	8,040	10,400

DP-1	
TPH-g	ND
TPH-d	ND
B	ND
E	ND
T	ND
X	ND

DP-2	
TPH-g	ND
TPH-d	ND
B	ND
E	ND
T	ND
X	ND

MW-6	
TPH-g	ND
TPH-d	ND
B	ND
E	ND
T	ND
X	ND

DP-3	
TPH-g	ND
TPH-d	ND
B	ND
E	ND
T	ND
X	ND

MW-7	
TPH-g	ND
TPH-d	ND
B	ND
E	ND
T	ND
X	ND

DP-4	
TPH-g	ND
TPH-d	ND
B	ND
E	ND
T	ND
X	ND

MW-5	
TPH-g	ND
TPH-d	ND
B	ND
E	ND
T	ND
X	ND

MW-3	
TPH-g	ND
TPH-d	ND
B	ND
E	ND
T	ND
X	ND

LEGEND

- CURB LINE
- FENCE LINE
- SOIL BORING LOCATION (ERM-WEST, 1987)
- SOIL BORING LOCATION (Geocon, 1995)
- SOIL BORING LOCATION (ITC, 1996)
- SOIL BORING LOCATION (PSI, 1999)
- MONITORING WELL LOCATION (PSI, 1999)
- SOIL BORING LOCATION (Kleinfelder, 2008)
- SOIL BORING/MONITORING WELL LOCATION (Kleinfelder, 2008)

ND	NOT DETECTED AT OR ABOVE LABORATORY REPORTING LIMITS
TPH	TOTAL PETROLEUM HYDROCARBONS
TPH-g	TPH AS GASOLINE (µg/L)
TPH-d	TPH AS DIESEL (µg/L)
B	BENZENE (µg/L)
E	ETHYLBENZENE (µg/L)
T	TOLUENE (µg/L)
X	XYLENES (µg/L)
DUP	DUPLICATE SAMPLE

NOTES:

1. Concentrations are in micrograms per liter (µg/L)
2. Locations are approximate.

N

50 25 0 50

APPROXIMATE SCALE (feet)

REFERENCE:
Engeo Inc., Site Plan, dated January 1993
ERM, Site Plan, dated August, 2001

The information included on this graphic representation has been compiled from a variety of sources and is subject to change without notice. Kleinfelder makes no representations or warranties, express or implied, as to accuracy, completeness, timeliness, or rights to the use of such information. This document is not intended for use as a land survey product nor is it designed or intended as a construction design document. The use or misuse of the information contained on this graphic representation is at the sole risk of the party using or misusing the information.

KLEINFELDER
Bright People. Right Solutions.
www.kleinfelder.com

PROJECT NO.	95539
DRAWN:	NOV 2008
DRAWN BY:	JDS
CHECKED BY:	JG
FILE NAME:	GWS_Sept08.dwg

BTEX, TPH-g AND TPH-d IN GROUNDWATER: SEPTEMBER, 2008

CALTRANS DISTRICT 4 EXCESS LAND
SIXTH STREET AND CASTRO STREET
OAKLAND, CALIFORNIA

PLATE **4**

PLOTTED: 18 Nov 2008, 2:00pm, Isue
ATTACHED IMAGES: Images: SITE-VIC.jpg Images: SITEPLAN.jpg
ATTACHED XREFS: XRef: Eng-A_8x11_P_StyleA: XRef: 08135 KLEIN: XRef: Eng-B_11x17_L_StyleA
CAD FILE: T:\2008\08Projects\95539\GRAPHICs\3\ LAYOUT: GWRESULTS

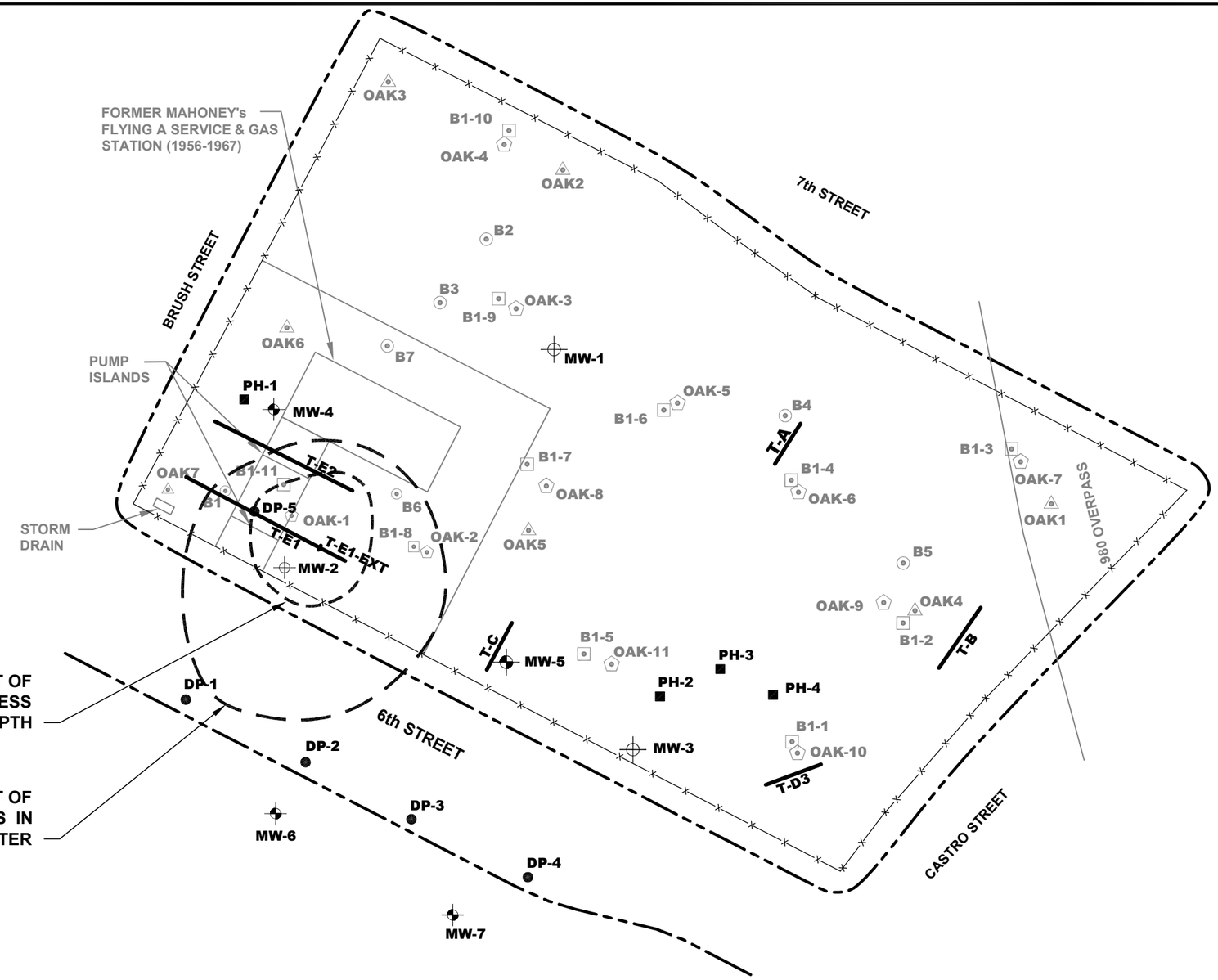

LEGEND

- CURB LINE
- FENCE LINE
- SOIL BORING LOCATION (ERM-WEST, 1987)
- SOIL BORING LOCATION (Geocon, 1995)
- SOIL BORING LOCATION (ITC, 1996)
- SOIL BORING LOCATION (PSI, 1999)
- MONITORING WELL LOCATION (PSI, 1999)
- SOIL BORING LOCATION (Kleinfelder, 2008)
- SOIL BORING/MONITORING WELL LOCATION (Kleinfelder, 2008)
- TPH — TOTAL PETROLEUM HYDROCARBONS
- POTHOLE EXCAVATED WITH BACKHOE (Kleinfelder, 2008)
- TRENCHES

NOTE:
1. Locations are approximate.

N

50 25 0 50

APPROXIMATE SCALE (feet)

REFERENCE:
Engeo Inc., Site Plan, dated January 1993
ERM, Site Plan, dated August, 2001

The information included on this graphic representation has been compiled from a variety of sources and is subject to change without notice. Kleinfelder makes no representations or warranties, express or implied, as to accuracy, completeness, timeliness, or rights to the use of such information. This document is not intended for use as a land survey product nor is it designed or intended as a construction design document. The use or misuse of the information contained on this graphic representation is at the sole risk of the party using or misusing the information.

KLEINFELDER
Bright People. Right Solutions.
www.kleinfelder.com

PROJECT NO.	95539
DRAWN:	NOV 2008
DRAWN BY:	JDS
CHECKED BY:	JG
FILE NAME:	GWS_Sept08.dwg

ESTIMATED EXTENT OF TPH IMPACTS TO SOIL AND GROUNDWATER: SEPTEMBER, 2008

CALTRANS DISTRICT 4 EXCESS LAND
SIXTH STREET AND CASTRO STREET
OAKLAND, CALIFORNIA

PLATE
5

PLOTTED: 18 Nov 2008, 2:00pm, Isue
ATTACHED IMAGES: Images: SITE-VIC.jpg Images: SITEPLAN.jpg
ATTACHED XREFS: XRef: Eng-A_8x11_P_StyleA: XRef: 08135 KLEIN: XRef: Eng-B_11x17_L_StyleA
CAD FILE: T:\2008\08Projects\95539\GRAPHICs\3\ LAYOUT: TPH extent

APPENDIX A

DRILLING PERMITS

Alameda County Public Works Agency - Water Resources Well Permit

399 Elmhurst Street
Hayward, CA 94544-1395
Telephone: (510)670-6633 Fax:(510)782-1939

Application Approved on: 08/06/2008 By jamesy

Permit Numbers: W2008-0532 to W2008-0536
Permits Valid from 09/02/2008 to 10/01/2008

Application Id: 1217867162445
City of Project Site: Oakland
Site Location: 6th St & Castro St, Oakland, CA
Project Start Date: 09/02/2008
Completion Date: 10/01/2008
Requested Inspection: 09/02/2008
Scheduled Inspection: 09/02/2008 at 3:00 PM (Contact your inspector, Vicky Hamlin at (510) 670-5443, to confirm.)

Applicant: Kleinfelder - Charlie Almestad
1970 Broadway #710, Oakland, CA 94612
Phone: 510-628-9000

Property Owner: CA Dept. of Transportation
111 Grand Avenue, Oakland, CA 94623
Phone: 510-286-5635

Client: ** same as Property Owner **

Total Due: $1610.00
Receipt Number: **Total Amount Paid:** $0.00
Payment Type: EXMPT **PAYMENT EXEMPT**

Works Requesting Permits:

Well Construction-Monitoring-Monitoring - 4 Wells
Driller: Gregg - Lic #: 485165 - Method: other **Work Total: $1380.00**

Specifications

Permit #	Issued Date	Expire Date	Owner Well Id	Hole Diam.	Casing Diam.	Seal Depth	Max. Depth
W2008-0532	08/06/2008	12/01/2008	MW-4	8.00 in.	2.00 in.	24.00 ft	25.00 ft
W2008-0533	08/06/2008	12/01/2008	MW-5	8.00 in.	2.00 in.	24.00 ft	25.00 ft
W2008-0534	08/06/2008	12/01/2008	MW-6	8.00 in.	2.00 in.	24.00 ft	25.00 ft
W2008-0535	08/06/2008	12/01/2008	MW-7	8.00 in.	2.00 in.	24.00 ft	25.00 ft

Specific Work Permit Conditions

1. Permittee shall assume entire responsibility for all activities and uses under this permit and shall indemnify, defend and save the Alameda County Public Works Agency, its officers, agents, and employees free and harmless from any and all expense, cost, liability in connection with or resulting from the exercise of this Permit including, but not limited to, properly damage, personal injury and wrongful death.

2. Permitte, permittee's contractors, consultants or agents shall be responsible to assure that all material or waters generated during drilling, boring destruction, and/or other activities associated with this Permit will be safely handled, properly managed, and disposed of according to all applicable federal, state, and local statutes regulating such. In no case shall these materials and/or waters be allowed to enter, or potentially enter, on or off-site storm sewers, dry wells, or waterways or be allowed to move off the property where work is being completed.

3. Prior to any drilling activities, it shall be the applicant's responsibility to contact and coordinate an Underground Service Alert (USA), obtain encroachment permit(s), excavation permit(s) or any other permits or agreements required for that Federal, State, County or City, and follow all City or County Ordinances. No work shall begin until all the permits and requirements have been approved or obtained. It shall also be the applicants responsibilities to provide to the Cities or to Alameda County an Traffic Safety Plan for any lane closures or detours planned. No work shall begin until all the

permits and requirements have been approved or obtained.

4. Compliance with the well-sealing specifications shall not exempt the well-sealing contractor from complying with appropriate State reporting-requirements related to well construction or destruction (Sections 13750 through 13755 (Division 7, Chapter 10, Article 3) of the California Water Code). Contractor must complete State DWR Form 188 and mail original to the Alameda County Public Works Agency, Water Resources Section, within 60 days. Including permit number and site map.

5. Applicant shall submit the copies of the approved encroachment permit to this office within 60 days.

6. Applicant shall contact Vicky Hamlin for an inspection time at 510-670-5443 or email to vickyh@acpwa.org at least five (5) working days prior to starting, once the permit has been approved. Confirm the scheduled date(s) at least 24 hours prior to drilling.

7. Wells shall have a Christy box or similar structure with a locking cap or cover. Well(s) shall be kept locked at all times. Well(s) that become damaged by traffic or construction shall be repaired in a timely manner or destroyed immediately (through permit process). No well(s) shall be left in a manner to act as a conduit at any time.

8. Minimum surface seal thickness is two inches of cement grout placed by tremie

9. Minimum seal (Neat Cement seal) depth for monitoring wells is 5 feet below ground surface(BGS) or the maximum depth practicable or 20 feet.

10. Copy of approved drilling permit must be on site at all times. Failure to present or show proof of the approved permit application on site shall result in a fine of $500.00.

Borehole(s) for Investigation-Contamination Study - 5 Boreholes
Driller: Gregg - Lic #: 485165 - Method: other **Work Total: $230.00**

Specifications

Permit Number	Issued Dt	Expire Dt	# Boreholes	Hole Diam	Max Depth
W2008-0536	08/06/2008	12/01/2008	5	2.00 in.	15.00 ft

Specific Work Permit Conditions

1. Backfill bore hole by tremie with cement grout or cement grout/sand mixture. Upper two-three feet replaced in kind or with compacted cuttings. All cuttings remaining or unused shall be containerized and hauled off site. The containers shall be clearly labeled to the ownership of the container and labeled hazardous or non-hazardous.

2. Boreholes shall not be left open for a period of more than 24 hours. All boreholes left open more than 24 hours will need approval from Alameda County Public Works Agency, Water Resources Section. All boreholes shall be backfilled according to permit destruction requirements and all concrete material and asphalt material shall be to Caltrans Spec or County/City Codes. No borehole(s) shall be left in a manner to act as a conduit at any time.

3. Permittee shall assume entire responsibility for all activities and uses under this permit and shall indemnify, defend and save the Alameda County Public Works Agency, its officers, agents, and employees free and harmless from any and all expense, cost, liability in connection with or resulting from the exercise of this Permit including, but not limited to, properly damage, personal injury and wrongful death.

4. Prior to any drilling activities, it shall be the applicant's responsibility to contact and coordinate an Underground Service Alert (USA), obtain encroachment permit(s), excavation permit(s) or any other permits or agreements required for that Federal, State, County or City, and follow all City or County Ordinances. No work shall begin until all the permits and requirements have been approved or obtained. It shall also be the applicants responsibilities to provide to the Cities or to Alameda County an Traffic Safety Plan for any lane closures or detours planned. No work shall begin until all the permits and requirements have been approved or obtained.

5. Applicant shall contact Vicky Hamlin for an inspection time at 510-670-5443 or email to vickyh@acpwa.org at least five (5) working days prior to starting, once the permit has been approved. Confirm the scheduled date(s) at least 24 hours prior to drilling.

6. Copy of approved drilling permit must be on site at all times. Failure to present or show proof of the approved permit application on site shall result in a fine of $500.00.

7. Permit is valid only for the purpose specified herein. No changes in construction procedures, as described on this permit application. Boreholes shall not be converted to monitoring wells, without a permit application process.

APPENDIX B

SOIL BORING LOGS

UNIFIED SOIL CLASSIFICATION SYSTEM

MAJOR DIVISIONS		LTR	ID	DESCRIPTION
COARSE GRAINED SOILS	GRAVEL AND GRAVELLY	GW		Well-graded gravels or gravel with sand, little or no fines.
		GP		Poorly-graded gravels or gravel with sand, little or no fines.
		GM		Silty gravels, silty gravel with sand mixture.
		GC		Clayey gravels, clayey gravel with sand mixture.
	SAND AND SANDY	SW		Well-graded sands or gravelly sands, little or no fines.
		SP		Poorly-graded sands or gravelly sands, little or no fines.
		SM		Silty sand.
		SC		Clayey sand.

MAJOR DIVISIONS		LTR	ID	DESCRIPTION
FINE GRAINED SOILS	SILTS AND CLAYS	ML		Inorganic silts and very fine sands, rock flour or clayey silts with slight plasticity.
		CL		Inorganic lean clays of low to medium plasticity, gravelly clays, sandy clays, silty clays.
		OL		Organic silts and organic silt-clays of low plasticity.
	SILTS AND CLAYS	MH		Inorganic elastic silts, micaceous or diatomaceous or silty soils.
		CH		Inorganic fat clays (high plasticity).
		OH		Organic clays of medium high to high plasticity.
HIGHLY ORGANIC SOILS		Pt		Peat and other highly organic soils.

Geoprobe, Direct Push Sample

Large Bore Discrete Soil Sampler, 1.5 in. O.D., 1.12 in. I.D.

Modified California Sampler, 2.5 in. O.D., 2 in. I.D.

California Sampler, 3.0 in. dia.

Shelby Tube 3.0 inch O.D.

Blank casing

Screened casing

Cement grout

Bentonite

Sand pack or gravel pack

Sharp Contact (observed)

Inferred Contact (contact not observed)

Gradational Contract (observed)

Water level observed in boring

Stabilized water level

OVA Organic Vapor Analyzer

PID Total organic vapors (parts per million) measured by a photo-ionization device

FID Total Organic vapors (parts per million) measured by a flame-ionization device

NA Not Applicable

NFWE No free water encountered

Notes: Blow counts represent the number of blows a 140-pound hammer falling 30 inches required to drive a sampler through the last 12 inches of an 18 inch penetration.

The lines separating strata on the logs represent approximate boundaries only. The actual transition may be gradual. No warranty is provided as to the continuity of soil strata between borings. Logs represent the soil section observed at the boring location on the date of drilling only.

References to plasticity of cohesive soils are based on qualitative field observations and not on quantative field or laboratory tests. Qualitative soil plasticity is noted solely to aid in stratigraphic correlation and is not intended for geotechnical characterization of soils.

KLEINFELDER
Bright People. Right Solutions.

PROJECT NO. 95539

BORING LOG LEGEND

CALTRANS DISTRICT 4 EXCESS LAND
SIXTH STREET AND CASTRO STREET
OAKLAND, CALIFORNIA

PLATE

B-1

11/18/2008 9:47:25 AM

Date Completed: 9/2/08

Drilling method: 2" Direct Push

Logged By: J. Gravesen

Hammer Wt: None

Total Depth: 22.0 ft

Notes: Asphalt street

Depth (feet)	Sample Number	Sample Type	Blows/Foot	Recovery (%)	OVA (ppm) PID	USCS	Description	Remarks
							ASPHALT CONCRETE - approximate 6 inches thick	
1							**AGGREGATE BASEROCK** - approximate 2 feet thick	
2								
3					0.0		**FINE SAND with CLAY (SP-SC)** - dark yellowish-brown (10YR 4/4), slightly moist, loose, poorly graded	
4								
5				100	0.0		- hand cleared to 5 feet bgs - yellowish-brown (10YR 5/6)	
6								
7								
8				100	0.0		- dark yellowish-brown (10YR 4/6), moist	
9								
10								
11							- mottled with light olive-brown (2.5Y 5/3)	
12				100	0.0			
13								
14	DP-1-14							▽
15							- wet	
16				100	0.0			
17							- gray striation	
18								
19								
20				100	0.0			
21								
22							Boring terminated at 22 feet bgs. Groundwater sample DP-1-W collected at 12:50.	
23								
24								
25								
26								
27								

KLEINFELDER
Bright People. Right Solutions.

PROJECT NO. 95539

LOG OF BORING NO. DP-1

CALTRANS DISTRICT 4 EXCESS LAND
SIXTH STREET AND CASTRO STREET
OAKLAND, CALIFORNIA

PLATE

B-2

L:\2008\08PROJECTS\95539\95539.GPJ

11/18/2008 9:48:17 AM

Date Completed: 9/2/08

Drilling method: 2" Direct Push

Logged By: J. Gravesen

Hammer Wt: None

Total Depth: 22.0 ft

Notes: Asphalt street

Depth (feet)	Sample Number	Sample Type	Blows/Foot	Recovery (%)	OVA (ppm) PID	USCS	Description	Remarks
							ASPHALT CONCRETE - approximate 6 inches thick	
1							**AGGREGATE BASEROCK** - approximate 2 feet thick	
2								
3							**FINE SAND with CLAY (SP-SC)** - dark yellowish-brown (10yr 4/4), moist, loose, poorly graded	
4								
5				100	0.0		- hand cleared to 5 feet bgs - mottled yellowish-brown (10yr 5/6) olive-yellow (2.5Y 6/6), slightly moist, loose, poorly graded	
6								
7								
8				100	0.0		- dark yellowish-brown (10yr 4/6), medium dense	
9								
10							- mottled yellowish-brown (10YR 5/6) olive-yellow (2.5Y 6/6), slightly moist, loose, poorly graded	
11								
12				100	0.0			
13	DP-2-13						- wet	∇
14								
15								
16				12	0.0			
17								
18								
19								
20							- liner stuck in Geoprobe tool	
21								
22							Hydropunch to 22 feet for water sample	
23							Boring terminated at 22 feet bgs. Groundwater sample DP-2-W collected at 12:20.	
24								
25								
26								
27								

KLEINFELDER
Bright People. Right Solutions.

PROJECT NO. 95539

LOG OF BORING NO. DP-2

CALTRANS DISTRICT 4 EXCESS LAND
SIXTH STREET AND CASTRO STREET
OAKLAND, CALIFORNIA

PLATE

B-3

L:\2008\08PROJECTS\95539\95539.GPJ

11/18/2008 9:48:25 AM

Date Completed: 9/2/08

Drilling method: 2" Direct Push

Logged By: J. Gravesen

Hammer Wt: None

Total Depth: 22.0 ft

Notes: Asphalt street

Depth (feet)	Sample Number	Sample Type	Blows/Foot	Recovery (%)	OVA (ppm) PID	USCS	Description	Remarks
							ASPHALT CONCRETE - approximate 6 inches thick	
1							**AGGREGATE BASEROCK** - approximate 2.5 feet thick	
2								
3							**FINE SAND with CLAY (SP-SC)** - dark yellowish-brown (10YR 4/4), slightly moist, loose, poorly graded	
4								
5				100	0.0		- mottled yellowish brown (10YR 5/6) olive-yellow (2.5Y 6/6)	
6								
7								
8				100	0.0			
9							- moist, medium dense	
10								
11								
12	DP-3-12			100	0.0		- yellowish-brown (10YR 5/6), wet	∇
13								
14								
15								
16				100	0.0			
17							- gray striation	
18								
19								
20				100	0.0			
21								
22							Boring terminated at 22 feet bgs. Groundwater sample DP-3-W collected at 9:00.	
23								
24								
25								
26								
27								

KLEINFELDER
Bright People. Right Solutions.

PROJECT NO. 95539

LOG OF BORING NO. DP-3

CALTRANS DISTRICT 4 EXCESS LAND
SIXTH STREET AND CASTRO STREET
OAKLAND, CALIFORNIA

PLATE

B-4

L:\2008\08PROJECTS\95539\95539.GPJ

11/18/2008 9:48:32 AM

Date Completed: 9/2/08

Drilling method: 2" Direct Push

Logged By: J. Gravesen

Hammer Wt: None

Total Depth: 20.0 ft

Notes: Asphalt street

Depth (feet)	Sample Number	Sample Type	Blows/Foot	Recovery (%)	OVA (ppm) PID	USCS	Description	Remarks
							ASPHALT CONCRETE - approximate 6 inches thick	
1							**AGGREGATE BASEROCK** - approximate 2 feet thick	
2								
3							**FINE SAND with CLAY (SP-SC)** - dark yellowish-brown (10YR 4/4), slightly moist, loose, poorly graded	
4								
5				100	0.0		- hand cleared to 5 feet bgs - olive-yellow (2.5Y 6/6)	
6								
7								
8				100	0.0		- mottled yellowish brown (10YR 5/6) olive-yellow (2.5Y 6/6)	
9								
10							- moist	
11								
12	DP-4-12			100	0.0			
13								
14							- wet	∇
15								
16				100	0.0			
17								
18								
19								
20							Boring terminated at 20 feet bgs. Groundwater sample DP-4-W collected at 9:46.	
21								
22								
23								
24								
25								
26								
27								

KLEINFELDER
Bright People. Right Solutions.

PROJECT NO. 95539

LOG OF BORING NO. DP-4

CALTRANS DISTRICT 4 EXCESS LAND
SIXTH STREET AND CASTRO STREET
OAKLAND, CALIFORNIA

PLATE

B-5

L:\2008\08PROJECTS\95539\95539.GPJ

11/18/2008 9:48:40 AM

Date Completed: 9/3/08

Drilling method: 2" Direct Push

Logged By: J. Gravesen

Hammer Wt: None

Total Depth: 24.0 ft

Notes: Soil and Grass

Depth (feet)	Sample Number	Sample Type	Blows/Foot	Recovery (%)	OVA (ppm) PID	USCS	Description	Remarks
							DUFF	
1							**FINE CLAYEY SAND (SC)** - dark yellowish-brown (10YR 4/6), moist, loose	
2								
3								
4								
5				100	0.0		- hand cleared to 5 feet bgs	
6	DP-5-6				0.0			
7								
8				100	0.0			
9								
10					145		**FINE SAND with CLAY (SP-SC)** - dark olive-gray (5Y 3/2), moist, medium dense, poorly graded, petroleum hydrocarbon stain and odor	
11					75 635			
12	DP-5-12			100	1735 0.0			
13					1600			
14					1000		- wet	∇
15								
16				100	0.0			
17					1200			
18					1000			
19					70			
20				12				
21								
22								
23								
24					0.0		- dark yellowish-brown (10YR 4/6), loose, poorly graded, no petroleum hydrocarbon odor	
25							Boring terminated at 24 feet bgs. Groundwater sample DP-5-W collected at 14:30.	
26								
27								

KLEINFELDER
Bright People. Right Solutions.

PROJECT NO. 95539

LOG OF BORING NO. DP-5

CALTRANS DISTRICT 4 EXCESS LAND
SIXTH STREET AND CASTRO STREET
OAKLAND, CALIFORNIA

PLATE

B-6

L:\2008\08PROJECTS\95539\95539.GPJ

11/18/2008 9:48:42 AM

Date Completed: 9/3/08

Drilling method: 8" Hollow Stem Auger for well instalation logged by 2 inch Direct Push

Logged By: J. Gravesen

Hammer Wt:

Total Depth: 24.0 ft

Notes: Soil & Grass

Depth (feet)	Sample Number	Sample Type	Blows/Foot	Recovery (%)	OVA (ppm) PID/FID	USCS	Description	Remarks	Well Construction
1							**AGGREGATE BASEROCK** - approximate 1 foot thick		
2							**CLAYEY SAND (SC)** - dark brown (10YR 3/3), slightly moist, loose, poorly graded, fine grained sand		
3									
4									Neat Cement Grout
5				66	0.0		- hand cleared to 5 feet bgs		
6							**GRAVEL (GW)** - light gray, hard, well graded, fines to 3/4 inch		
7							**FINE SAND with CLAY (SP-SC)** - olive-brown, slightly moist, loose, poorly graded, some coarse grained sand ~4mm		Blank 2" SCH40 PVC
8				38	0.0				
9							**FINE SAND (SP)** - white (2.5Y 8/1), dry, loose, poorly graded		
10									Bentonite Chips
11							**CLAYEY SAND (SC)** - mottled yellowish-brown (10YR 5/6) light olive-brown (2.5Y 5/3), moist, dense, poorly graded		
12				100	0.0		- dark yellowish-brown (10YR 4/6)		
13									
14	MW-4-14								
15							- increasing moisture, soft	▽	
16				100	0.0				
17									#2/16 Sand
18									Screened 2" 0.010 Slot SCH40 PVC
19							**FINE SAND with CLAY (SP-SC)** - dark yellowish-brown (10YR 4/4), moist, dense, poorly graded		
20				100	0.0				
21							- saturated, loose		
22									
23									TD = 23ft
24							Boring terminated at 24 feet bgs. Monitoring well installed.		
25									
26									
27									

KLEINFELDER
Bright People. Right Solutions.

PROJECT NO. 95539

LOG OF BORING NO. MW-4

CALTRANS DISTRICT 4 EXCESS LAND
SIXTH STREET AND CASTRO STREET
OAKLAND, CALIFORNIA

PLATE

B-7

L:\2008\08PROJECTS\95539\95539_MW.GPJ

11/18/2008 9:59:46 AM

Date Completed: 9/3/08

Drilling method: 8" Hollow Stem Auger for well instalation logged by 2 inch Direct Push

Logged By: J. Gravesen

Hammer Wt:

Total Depth: 24.0 ft

Notes: Grass

Depth (feet)	Sample Number	Sample Type	Blows/Foot	Recovery (%)	OVA (ppm) PID/FID	USCS	Description	Remarks	Well Construction
							DUFF		
1							**FINE SAND with CLAY (SP-SC)** - pale brown (10YR 6/3), dry, poorly graded		
2									
3									
4									Neat Cement Grout
5				100			- hand cleared to 5 feet bgs		
6					0.7		**CLAYEY SAND (SC)** - yellowish- brown (10YR 5/6), moist, loose, fine grained sand poorly graded, no petrolum odor		
7					0.3				Blank 2" SCH40 PVC
8					0.0				
9				100	8.5				
10					1.0				Bentonite Chips
11					0.0				
12	MW-5-12				0.0				
13				100	0.0		- saturated, loose	▽	
14									
15							**FINE SAND with CLAY (SP-SC)** - mottled yellowish brown (10YR 5/6) light yellowish brown (2.5Y 6/4), saturated, loose, poorly graded		
16				100	0.0				
17									#2/16 Sand
18									Screened 2" 0.010 Slot SCH40 PVC
19									
20				100	0.0				
21									
22							**FINE SAND with CLAY (SP-SC)** - dark yellowish-brown (10YR 4/6), saturated, loose, poorly graded		
23									TD = 23ft
24							Boring terminated at 24 feet bgs. Monitoring well installed.		
25									
26									
27									

KLEINFELDER
Bright People. Right Solutions.

PROJECT NO. 95539

LOG OF BORING NO. MW-5

CALTRANS DISTRICT 4 EXCESS LAND
SIXTH STREET AND CASTRO STREET
OAKLAND, CALIFORNIA

PLATE

B-8

L:\2008\08PROJECTS\95539\95539_MW.GPJ

11/18/2008 9:59:54 AM

Date Completed: 9/3/08

Logged By: J. Gravesen

Total Depth: 24.0 ft

Drilling method: 8" Hollow Stem Auger for well instalation logged by 2 inch Direct Push

Hammer Wt:

Notes: Soil

Depth (feet)	Sample Number	Sample Type	Blows/Foot	Recovery (%)	OVA (ppm) PID/FID	USCS	Description	Remarks	Well Construction
							DUFF		
1–2							**FINE SAND with CLAY (SP-SC)** - dark yellowish brown (10YR 4/4), slightly moist, loose, poorly graded		
3–4							**FINE SAND with CLAY (SP-SC)** - yellowish brown (10YR 5/4), moist, loose, poorly graded		
5							- hand cleared to 5 feet bgs		Neat Cement Grout
5–6				100	0.0		**FINE SAND with CLAY (SP-SC)** - mottled brownish-yellow (10YR 6/6) & light yellowish brown (10YR 6/4), moist, loose, poorly graded, no petrolum odor		
7									Blank 2" SCH40 PVC
8				100	0.0				
9–10							- increasing moisture		Bentonite Chips
11–12	MW-6-12			100	0.0				
13–14							- saturated	▽	
15									
16				100	0.0				
17									#2/16 Sand
18									Screened 2" 0.010 Slot SCH40 PVC
19–20				100	0.0		**CLAYEY SAND (SC)** - mottled brownish-yellow (10YR 6/6) & light yellowish brown (10YR 6/4), saturated, loose, poorly graded, no petrolum odor		
21–22									
23									TD = 23ft
24							Boring terminated at 24 feet bgs. Monitoring well installed.		
25–27									

KLEINFELDER
Bright People. Right Solutions.

PROJECT NO. 95539

LOG OF BORING NO. MW-6

CALTRANS DISTRICT 4 EXCESS LAND
SIXTH STREET AND CASTRO STREET
OAKLAND, CALIFORNIA

PLATE

B-9

L:\2008\08PROJECTS\95539\95539_MW.GPJ

11/18/2008 10:00:02 AM

Date Completed: 9/3/08

Drilling method: 8" Hollow Stem Auger for well instalation logged by 2 inch Direct Push

Logged By: J. Gravesen

Hammer Wt:

Total Depth: 24.0 ft

Notes: Soil

Depth (feet)	Sample Number	Sample Type	Blows/Foot	Recovery (%)	OVA (ppm) PID/FID	USCS	Description	Remarks	Well Construction
							DUFF		
1							**FINE SAND with CLAY (SP-SC)** - dark yellowish brown (10YR 4/4), slightly moist, loose, poorly graded		
2									
3							**FINE SAND with CLAY (SP-SC)** - yellowish brown (10YR 5/4), moist, loose, poorly graded		
4									Neat Cement Grout
5				100	0.0		- hand cleared to 5 feet bgs		
6							**CLAYEY SAND (SC)** - yellowish brown (10YR 6/6), moist, loose, poorly graded, fine graded sand		
7									Blank 2" SCH40 PVC
8				100	0.0				
9									
10									Bentonite Chips
11									
12				100	0.0		**FINE SAND with CLAY (SP-SC)** - yellowish brown (10YR 6/6), moist, loose, poorly graded		
13	MW-7-13								
14							- wet	▽	
15									
16				75	0.0				
17									#2/16 Sand
18									Screened 2" 0.010 Slot SCH40 PVC
19									
20				100	0.0		- gray mottling		
21									
22									
23									TD = 23ft
24							Boring terminated at 24 feet bgs. Monitoring well installed.		
25									
26									
27									

KLEINFELDER
Bright People. Right Solutions.

PROJECT NO. 95539

LOG OF BORING NO. MW-7

CALTRANS DISTRICT 4 EXCESS LAND
SIXTH STREET AND CASTRO STREET
OAKLAND, CALIFORNIA

PLATE

B-10

L:\2008\08PROJECTS\95539\95539_MW.GPJ

11/18/2008 10:00:10 AM

APPENDIX C

TEST PIT FIELD LOGS

KLEINFELDER
Bright People. Right Solutions.

TEST PIT FIELD LOG

Project Name: CTO
Project Number: 95539 Sheet: 1 of 1

Test Pit No./Box No(s): T - A	Location:	Excavation Equipment: JD 310 G
Total Depth:	Coordinates (X/Y, Lat/Long):	Excavation Company: CES
Date Begin/End: 9/23 – 9/23/08	Coordinate System/Datum:	Logged By/Checked By: J Graversen
Surface Conditions: soil	TP Direction/Orientation: North → South	Depth to Groundwater Initial/Time: Final/Time:

GRAPHIC LOG OF TEST PIT WALL
(Depicts EAST Facing Wall)

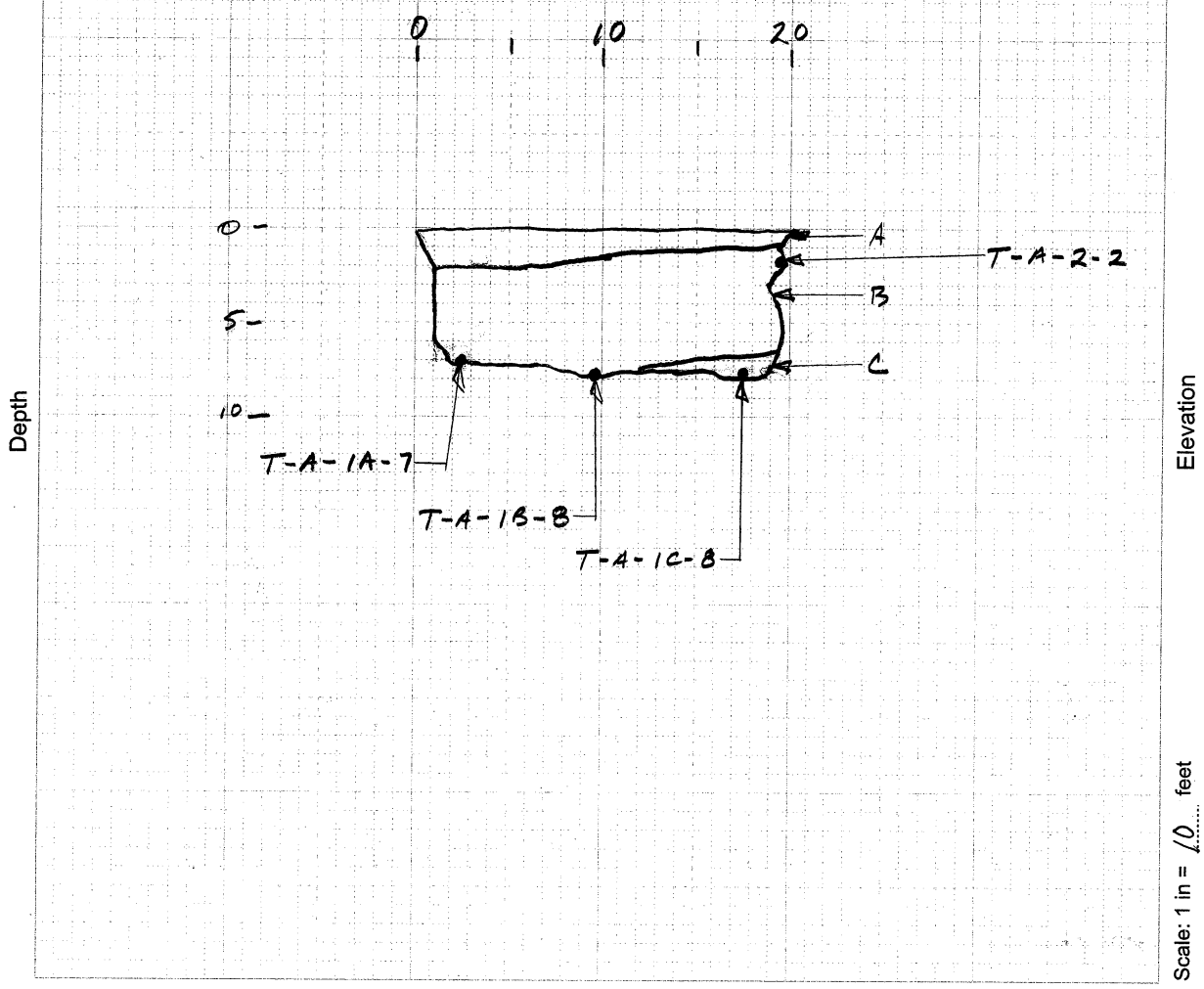

Unit	Depth	Material Description
A		Fine Sand, clayey, grayish tan, poorly graded w/ 3/4" rock angular dry
B		Fine Sand w/ clay, dark brown, w/ angular rock & red brick or tile pieces, slightly moist
C		Fine sand w/ clay, dark yellowish brown w/ dark brown viens, (appear to be roots), poorly graded, moist no PHC odor

ENG-37 REV 05/08

KLEINFELDER
Bright People. Right Solutions.

TEST PIT FIELD LOG

Project Name: CTO
Project Number: 95539 Sheet: 1 of 1

Test Pit No./Box No(s): T-B	Location:	Excavation Equipment: JD 310G
Total Depth:	Coordinates (X/Y, Lat/Long):	Excavation Company: CES
Date Begin/End: 9/24 — 9/24/08	Coordinate System/Datum:	Logged By/Checked By: J Gravesen
Surface Conditions: soil & vegetation	TP Direction/Orientation: North ← South	Depth to Groundwater Initial/Time: Final/Time:

GRAPHIC LOG OF TEST PIT WALL
(Depicts West Facing Wall)

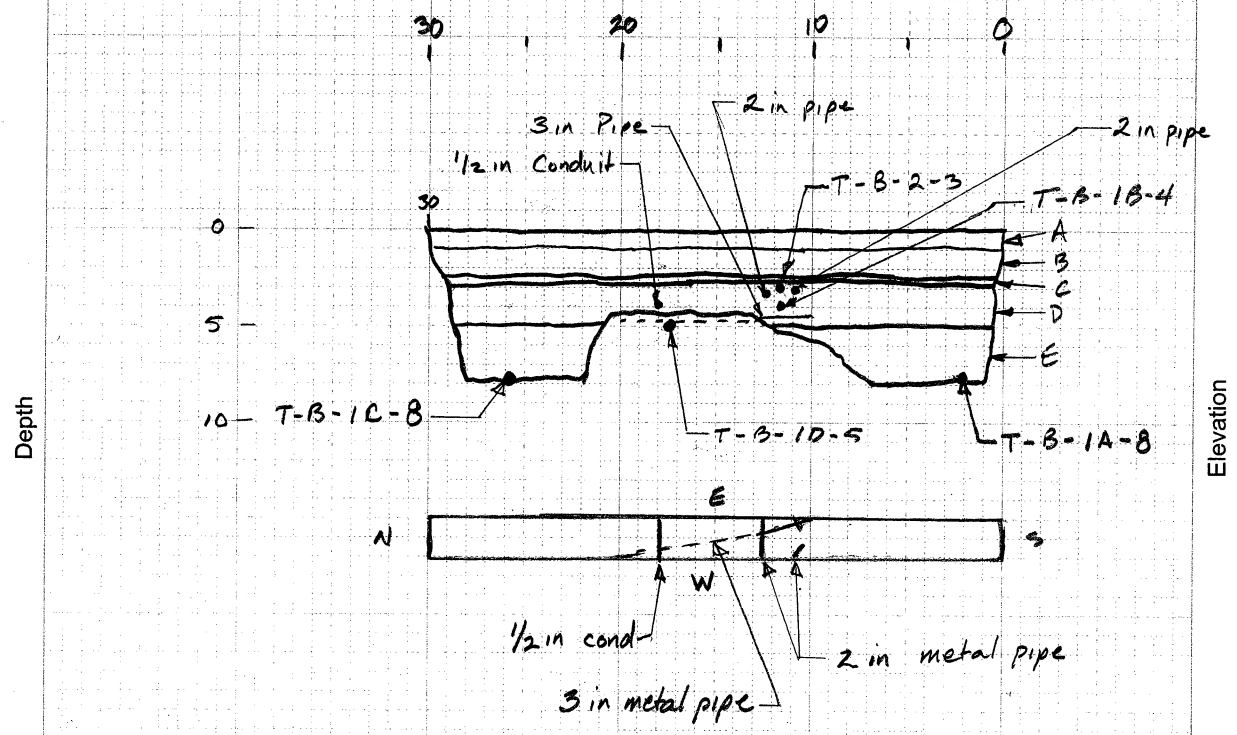

Scale: 1 in = 10 feet

Unit	Depth	Material Description
A		Clay w/ sand & gravel, well graded, lt olive brown, dry, hard
B		Sand w/ clay, olive brown, poorly graded, slightly moist, w/ gravel angular 3/4
C		Concrete debris, well graded, very hard
D		Sand w/ clay, dark brown, poorly graded, slightly moist
E		Sand w/ clay, yellowish brown, poorly graded, moist

ENG-37 REV 05/08

KLEINFELDER
Bright People. Right Solutions.

TEST PIT FIELD LOG

Project Name: Caltrans Oakland
Project Number: 95539 Sheet: 1 of 1

Test Pit No./Box No(s): T-C	Location: 6th St	Excavation Equipment: JD 310G
Total Depth:	Coordinates (X/Y, Lat/Long):	Excavation Company: CES
Date Begin/End: 9/23/08 – 9/23/08	Coordinate System/Datum:	Logged By/Checked By: J Gravesen
Surface Conditions: rock → grass	TP Direction/Orientation: North → South	Depth to Groundwater Initial/Time: — Final/Time: —

GRAPHIC LOG OF TEST PIT WALL
(Depicts West Facing Wall)

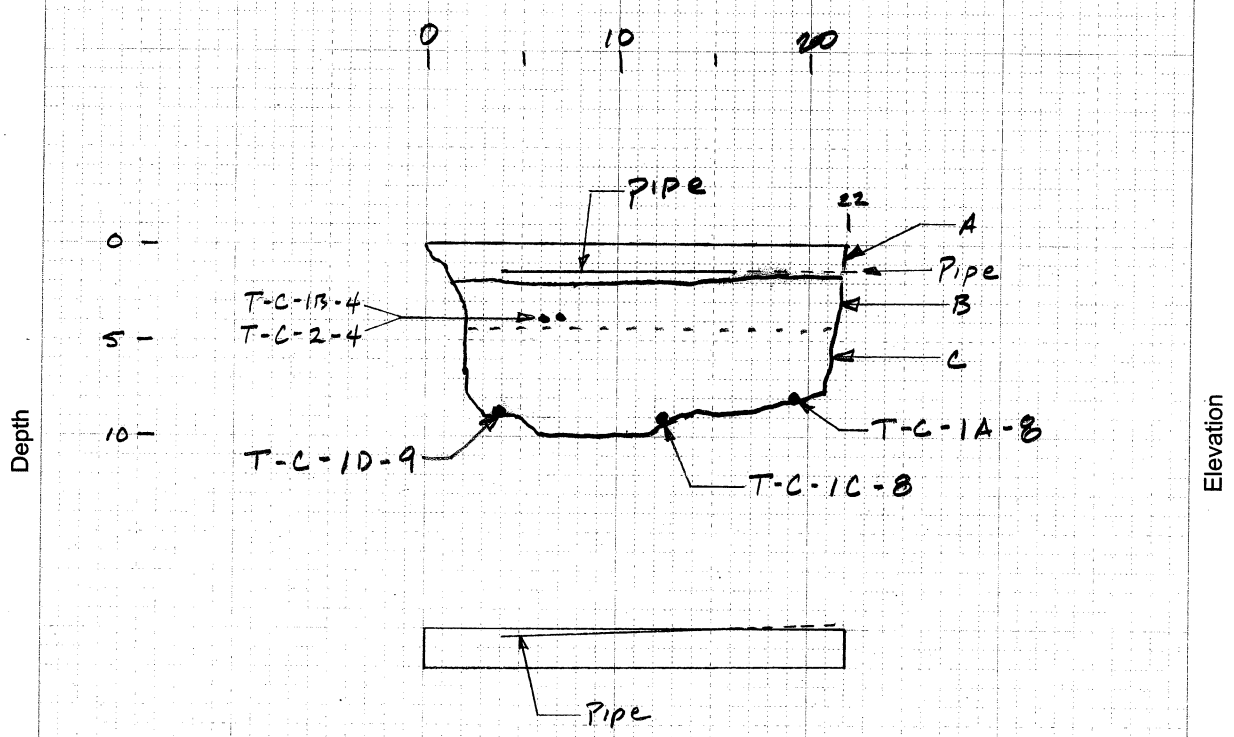

Scale: 1 in = 10 feet

Unit	Depth	Material Description
A		Fine sand, w/clay, grayish tan, dry poorly graded, w/ 3/4 in rock, angular
B		Fine sand w/ clay, yellowish brown, poorly graded, dry
C		Fine sand w/ clay, dark yellowish brown, poorly graded, moist
Pipe	1.5ft	Appeared to be sewer pipe 3in ID 4 1/4 in OD

ENG-37 REV 05/08

KLEINFELDER
Bright People. Right Solutions.

TEST PIT FIELD LOG

Project Name: CTO
Project Number: 95539 Sheet: 1 of 1

Test Pit No./Box No(s): T-D3	Location:	Excavation Equipment: JD 310G
Total Depth:	Coordinates (X/Y, Lat/Long):	Excavation Company: CES
Date Begin/End: 9/24 – 9/24/08	Coordinate System/Datum:	Logged By/Checked By: Jeff G
Surface Conditions: Soil & vegetation	TP Direction/Orientation: NE ← SW	Depth to Groundwater Initial/Time: Final/Time:

GRAPHIC LOG OF TEST PIT WALL
(Depicts NW Facing Wall)

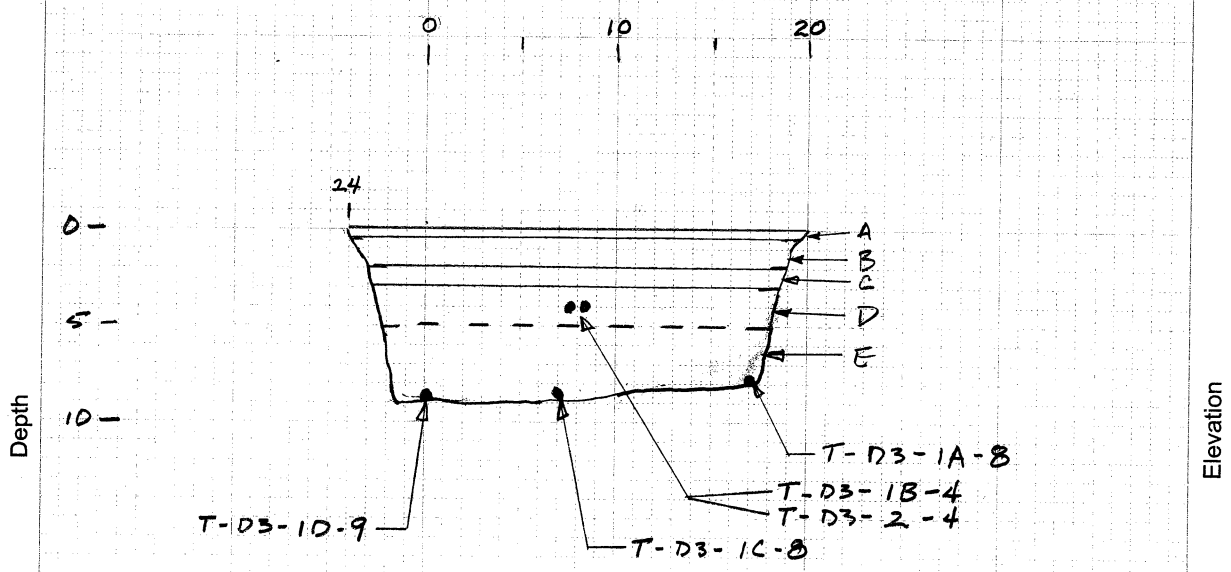

Scale: 1 in = 10 feet

Unit	Depth	Material Description
A		Clayey sand grayish tan, dry, hard, some gravel
B		Sand w/ clay, olive gray, w/ brick & concrete debris, dry, hard
		debris appears to be well graded from 1 in to 6 in
C		Sand w/ clay brown, poorly graded, dry
D		Sand w/ clay, yellowish brown, poorly graded, dry
E		same as above moist

ENG-37 REV 05/08

KLEINFELDER
Bright People. Right Solutions.

TEST PIT FIELD LOG

Project Name: Cal Trans Oakland
Project Number: 95539 Sheet: 1 of 1

Test Pit No./Box No(s): T-E1	Location:	Excavation Equipment: JD 310 G
Total Depth:	Coordinates (X/Y, Lat/Long):	Excavation Company: CES
Date Begin/End: 9/22/08 9/22/08	Coordinate System/Datum:	Logged By/Checked By: JeffG
Surface Conditions: vegetation → rock	TP Direction/Orientation: West → East	Depth to Groundwater Initial/Time: – Final/Time: –

GRAPHIC LOG OF TEST PIT WALL
(Depicts South Facing Wall)

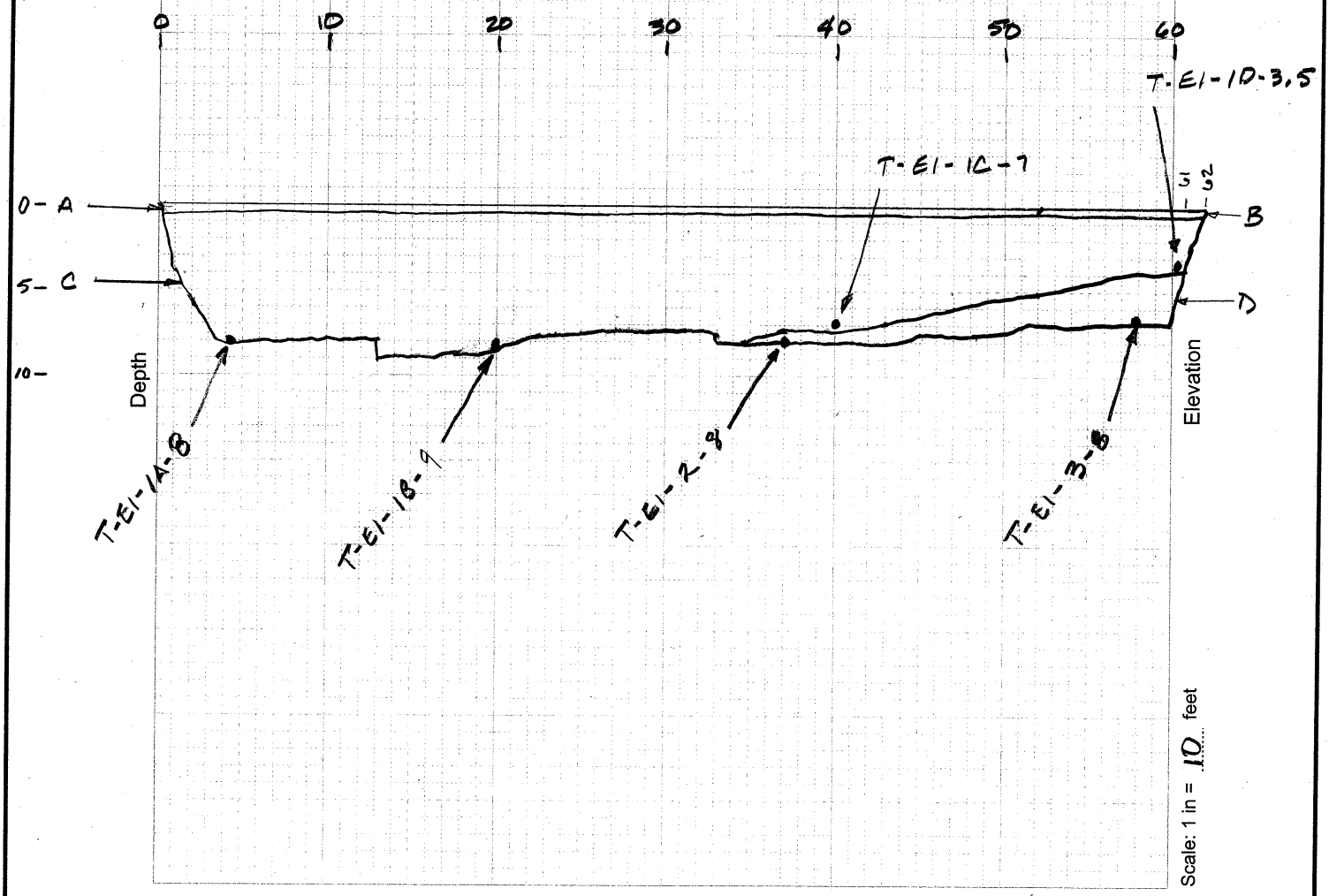

Unit	Depth (ft)	Material Description
A	0-0.5	Surface Duff, sandy soil w/ organic matter & some gravel
B	0-0.5	3/4" crushed base rock
C		fine sand with clay yellowish brown poorly graded med dense
D		fine sand with clay, olive brown, PHC odor

PHC = Petroleum Hydrocarbon

KLEINFELDER
Bright People. Right Solutions.

TEST PIT FIELD LOG

Project Name: CTO
Project Number: 95539 Sheet: 1 of 1

Test Pit No./Box No(s): T-E1-EXT	Location:	Excavation Equipment: JD 310G
Total Depth:	Coordinates (X/Y, Lat/Long):	Excavation Company: CES
Date Begin/End: 9/24 - 9/24/08	Coordinate System/Datum:	Logged By/Checked By: Jeff G
Surface Conditions: Gravel	TP Direction/Orientation: West → East	Depth to Groundwater Initial/Time: Final/Time:

GRAPHIC LOG OF TEST PIT WALL
(Depicts South Facing Wall)

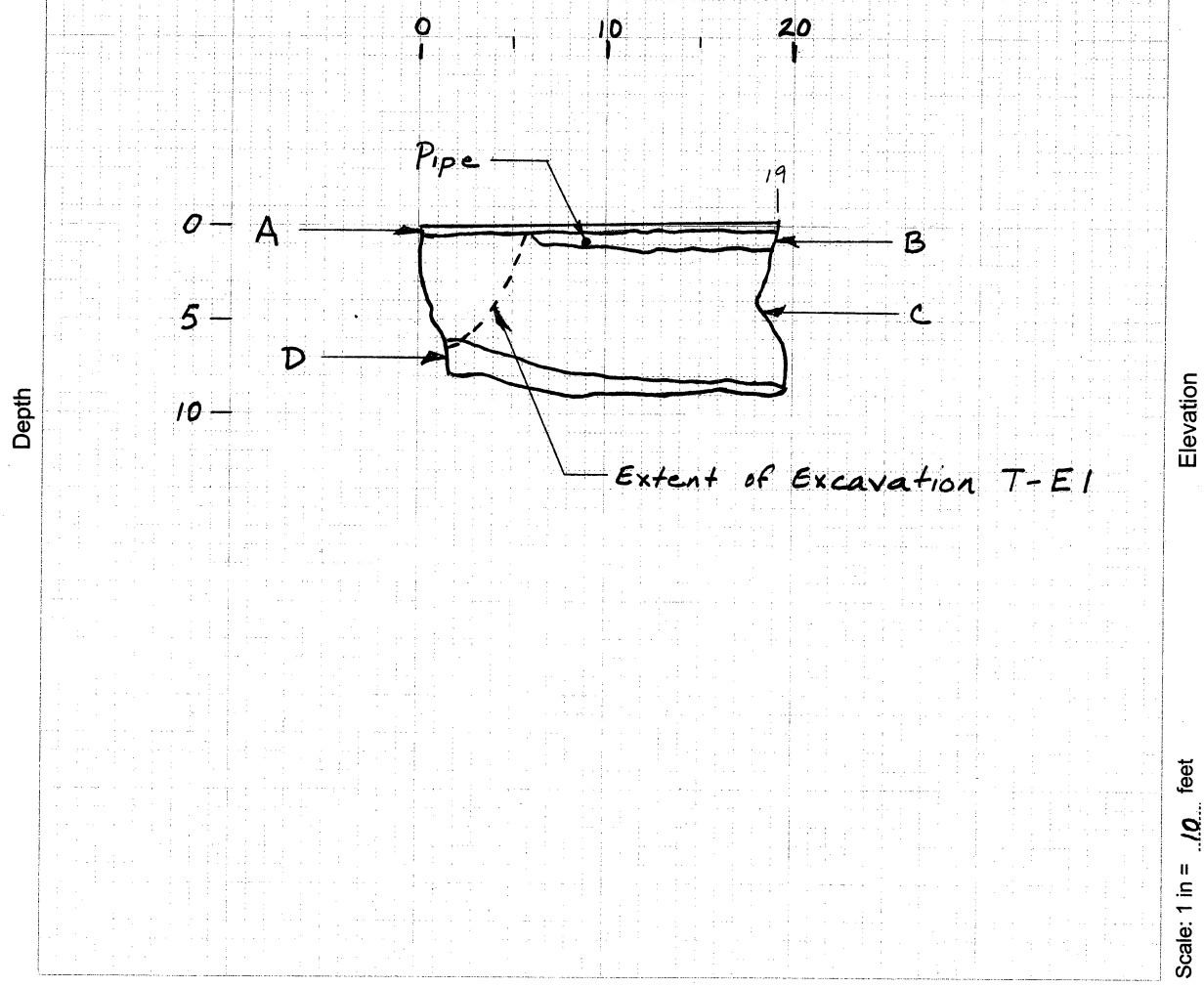

Unit	Depth	Material Description
A		3/4 inch crushed rock
B		Sand & gravel, well graded gravel up to 3/8 inch,
		angular, black, sewage odor
C		Fine sand w/ clay, yellowish brown, poorly graded, moist
D		Fine sand w/ clay, olive brown, poorly graded, moist
		PHC odor
Pipe		1 1/4 inch (1 3/4 inch OD) steel pipe, w/ ell & plug

KLEINFELDER
Bright People. Right Solutions.

TEST PIT FIELD LOG

Project Name: CTO
Project Number: 95539 Sheet: 1 of 1

Test Pit No./Box No(s): T-E2	Location:	Excavation Equipment: Case 310G
Total Depth:	Coordinates (X/Y, Lat/Long):	Excavation Company: CES
Date Begin/End: 9/22/08 9/22/08	Coordinate System/Datum:	Logged By/Checked By: JG
Surface Conditions: Grass → Rock	TP Direction/Orientation: West → East	Depth to Groundwater Initial/Time: Final/Time:

GRAPHIC LOG OF TEST PIT WALL
(Depicts North Facing Wall)

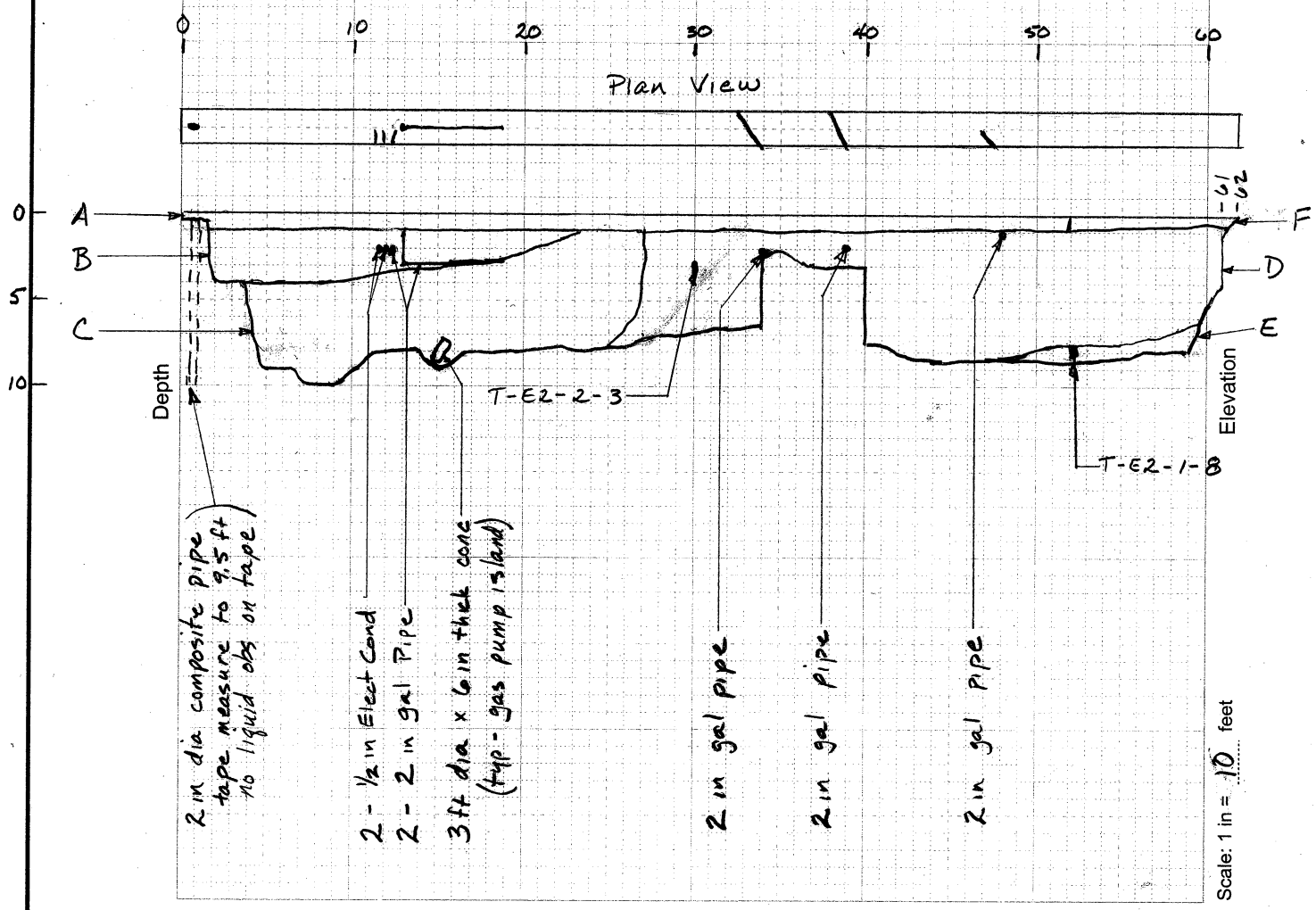

Unit	Depth	Material Description
A		Fine sand, tan, with vegetation
B		Fine sand, yellowish brown, poorly graded w/ chunks (0.5-2ft) of asphalt & concrete
C		Fine sand, dark brown poorly graded w/ chunks (0.5-2ft) of asphalt & concrete
D		Fine sand, yellowish brown, poorly graded, moist
E		Fine sand, olive brown, poorly graded, w/ PHC odor
F		Rock 3/4 inch angular

KLEINFELDER
Bright People. Right Solutions.

Sheet 1 of 1

PROJECT Caltrans 6th & Castro PROJECT NO. 95539/3
SUBJECT Test Pit Field Log for Pothole Excavations BY Jeff Gravesen DATE 9/24/08
REVIEWED BY _____ DATE _____

PH - 1

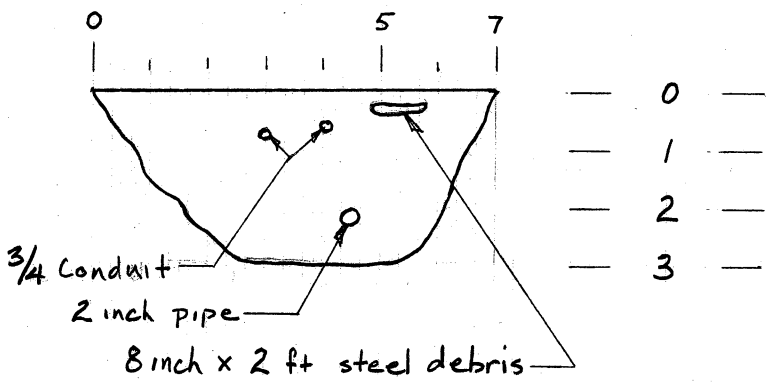

Northeast Facing Wall

PH - 2

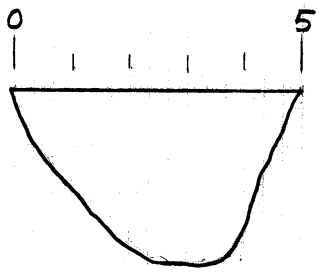

Debris = Bricks, asphalt, concret, wire

PH - 3

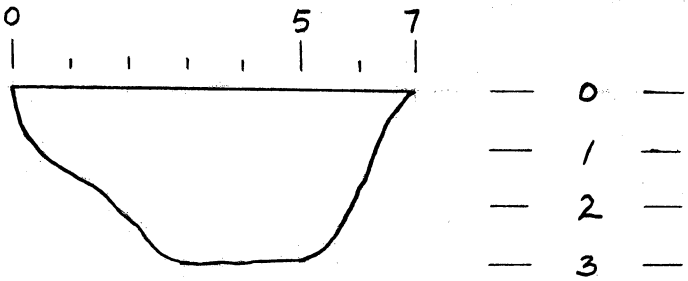

Debris = Regular brick and brick w/ dark gray surface and red center (possibly fire brick)

PH - 4

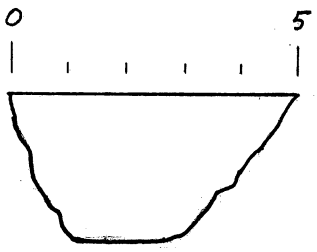

Several chunks of brick debris of varying sizes, largest = 16 x 6 x 6 inches

Distance in feet

PHOTOGRAPH 1. Trench T-A 001

PHOTOGRAPH 2. Trench T-B 005

KLEINFELDER
Bright People. Right Solutions.
www.kleinfelder.com

PROJECT NO.	95539
DRAWN:	APR 2008
DRAWN BY:	JDS
CHECKED BY:	JG
FILE NAME: PHOTOS.dwg	

TEST PIT PHOTOGRAPHS
SEPTEMBER 22, 23, & 24, 2008

CALTRANS OAKLAND
6TH STREET
OAKLAND, CALIFORNIA

APPENDIX

C-1

PHOTOGRAPH 3. Trench T-C 003

PHOTOGRAPH 4. Trench T-C 004

KLEINFELDER
Bright People. Right Solutions.
www.kleinfelder.com

PROJECT NO.	95539
DRAWN:	APR 2008
DRAWN BY:	JDS
CHECKED BY:	JG
FILE NAME: PHOTOS.dwg	

TEST PIT PHOTOGRAPHS (continued)
SEPTEMBER 22, 23, & 24, 2008

CALTRANS OAKLAND
6TH STREET
OAKLAND, CALIFORNIA

APPENDIX
C-2

PHOTOGRAPH 5. Trench T-E2 002

PHOTOGRAPH 6. Trench T-E2 010

KLEINFELDER
Bright People. Right Solutions.
www.kleinfelder.com

PROJECT NO.	95539
DRAWN:	APR 2009
DRAWN BY:	JDS
CHECKED BY:	JG
FILE NAME: PHOTOS.dwg	

TEST PIT PHOTOGRAPHS (continued)
SEPTEMBER 22, 23, & 24, 2008

CALTRANS OAKLAND
6TH STREET
OAKLAND, CALIFORNIA

APPENDIX
C-3

APPENDIX D

CALIFORNIA DEPARTMENT OF WATER RESOURCES

WELL COMPLETION REPORTS

CONFIDENTIAL

STATE OF CALIFORNIA DWR
WELL COMPLETION REPORT
(WELL LOGS)

REMOVED

CONFIDENTIAL

STATE OF CALIFORNIA DWR
WELL COMPLETION REPORT
(WELL LOGS)

REMOVED

CONFIDENTIAL

STATE OF CALIFORNIA DWR
WELL COMPLETION REPORT
(WELL LOGS)

REMOVED

CONFIDENTIAL

STATE OF CALIFORNIA DWR
WELL COMPLETION REPORT
(WELL LOGS)

REMOVED

APPENDIX E

WELL DEVELOPMENT FIELD LOGS

GREGG

MONITORING WELL DEVELOPMENT LOG

Page _____ of _____

All measurements taken from: ☑ Top of Casing ☐ Protective Casing ☐ Ground Level

Sample ID _____

Well Number MW-3
Date 9-8-08
Time Start: 8:20 End: 9:30
Client _____
Project _____
Job Number _____
Installation Date _____
Well Diameter 2"

Borehole Diameter 8"
Screen Length 10
Measured Depth (pre-development) 22.95
Measured Depth (post-development) 23.65
Static Water Level (ft.) 15.95
Standing Water Column (ft.) 7
One Well Volume (gal.) 1.19
One Annulus Vol. (gal.) _____

Qty. of Drilling Fluid Lost _____
Minimum Gal. to be Purged 11.9
Development Method Bail-Surge-Bail-pump
Purging Equipment SS Bailer-2" pump
Water Level Equipment Solinst
pH/EC Meter Horiba U10
Turbidity Meter Horiba U10
Other _____

Time	Amount Purged (gal.)	Field Parameters Measured							Comments	Field Tech.
		pH	EC	Turbidity	D.O.	D.O. Temp.	SAL.	GPM / W.L.		
9:02	8	7.76	.641	7999	—	19.7	0.02	1/—	Bail-5 GAL	
9:09	14	6.19	.599	731	—	20.1	0.02	1/—	Surge - 8:31-8:50	
9:15	19	6.17	.594	413	—	19.9	0.02	1/—	Bail-2 GAL	
FINAL FIELD PARAMETER MEASUREMENTS										

GREGG

MONITORING WELL DEVELOPMENT LOG

Page _____ of _____

All measurements taken from: ☑ Top of Casing ☐ Protective Casing ☐ Ground Level

Sample ID _____

Well Number MW-4
Date 9-8-08
Time Start: 10:30 End: 11:40
Client _____
Project _____
Job Number _____
Installation Date _____
Well Diameter 2"

Borehole Diameter 8"
Screen Length 10'
Measured Depth (pre-development) 26.30
Measured Depth (post-development) 26.33
Static Water Level (ft.) 17.24
Standing Water Column (ft.) 9.06
One Well Volume (gal.) 1.54
One Annulus Vol. (gal.) _____

Qty. of Drilling Fluid Lost _____
Minimum Gal. to be Purged 1.5
Development Method Bail-Surge-Bail-pump
Purging Equipment ~~SS Bailer~~ 2" pump
Water Level Equipment Solinst
pH/EC Meter Horiba U10
Turbidity Meter Horiba U10
Other _____

Time	Amount Purged (gal.)	Field Parameters Measured							Comments	Field Tech.
		pH	EC	Turbidity	D.O.	D.O. Temp.	SAL.	GPM / W.L.		
11:08	9	6.66	1.50	>999	–	19.3	0.06	1/–	Bail-2GAL	
11:13	14	6.40	1.32	323	–	19.4	0.06	1/–	SURGE-10:38	
11:18	19	6.30	1.27	34	–	19.5	0.06	1/–		

FINAL FIELD PARAMETER MEASUREMENTS

GREGG

MONITORING WELL DEVELOPMENT LOG

Page _____ of _____

All measurements taken from: ☐ Top of Casing ☐ Protective Casing ☐ Ground Level

Sample ID _____

Well Number MW-5
Date 9-8-08
Time Start: 9:30 End: 10:40
Client _____
Project _____
Job Number _____
Installation Date _____
Well Diameter 2"

Borehole Diameter 8"
Screen Length 10
Measured Depth (pre-development) 25.3
Measured Depth (post-development) 25.37
Static Water Level (ft.) 15.83
Standing Water Column (ft.) 9.47
One Well Volume (gal.) 1.60
One Annulus Vol. (gal.) _____

Qty. of Drilling Fluid Lost _____
Minimum Gal. to be Purged 16.0
Development Method Bail-Surge-Bail-pump
Purging Equipment SS Bailer-2" pump
Water Level Equipment Solinst
pH/EC Meter HORIBA U10
Turbidity Meter HORIBA U10
Other _____

Time	Amount Purged (gal.)	Field Parameters Measured							Comments	Field Tech.
		pH	EC	Turbidity	D.O.	D.O. Temp.	SAL.	GPM / W.L.		
10:05	9	7.02	1.63	>999	–	19.3	0.07	1/18.1	Bail-2 GAL	
10:10	14	6.25	1.61	700	–	19.4	0.07	1/19.13	SURGE 9:35-9:45	
10:17	17	6.24	1.62	687	–	19.5	0.07	1/19.94	Bail-2 GAL	

FINAL FIELD PARAMETER MEASUREMENTS

GREGG

MONITORING WELL DEVELOPMENT LOG

Page _____ of _____

All measurements taken from: ☑ Top of Casing ☐ Protective Casing ☐ Ground Level

Sample ID _____

Well Number MW-6
Date 9-8-08
Time Start: 1:05 End: 2:20
Client _____
Project _____
Job Number _____
Installation Date _____
Well Diameter 2"

Borehole Diameter 8"
Screen Length 10'
Measured Depth (pre-development) 26.48
Measured Depth (post-development) 26.48
Static Water Level (ft.) 15.70
Standing Water Column (ft.) 10.6
One Well Volume (gal.) 1.8
One Annulus Vol. (gal.) _____

Qty. of Drilling Fluid Lost _____
Minimum Gal. to be Purged 18.15
Development Method Bail-SURGE-Bail-pump
Purging Equipment SS Bailer-2" pump
Water Level Equipment Solinst
pH/EC Meter Horiba U10
Turbidity Meter Horiba U10
Other _____

Time	Amount Purged (gal.)	Field Parameters Measured							Comments	Field Tech.
		pH	EC	Turbidity	D.O.	D.O. Temp.	SAL.	GPM / W.L.		
1:50	10	7.63	1.18	>999	—	17.8	0.05	+/-	Bail-1.5	
1:55	15	6.66	1.00	>999	—	17.9	0.05	+/-	SURGE- 1:15-1:30	
2:00	20	6.40	.821	340	—	17.9	0.03	+/-	Bail- 1.5 GAL	

FINAL FIELD PARAMETER MEASUREMENTS

GREGG

MONITORING WELL DEVELOPMENT LOG

Page _____ of _____

All measurements taken from: ☑ Top of Casing ☐ Protective Casing ☐ Ground Level

Sample ID _____

Well Number MW-7

Date 9-8-08

Time Start: 12:05 End: _____

Client _____

Project _____

Job Number _____

Installation Date _____

Well Diameter 2"

Borehole Diameter 8"

Screen Length 10'

Measured Depth (pre-development) 27.07

Measured Depth (post-development) 27.07

Static Water Level (ft.) 16.34

Standing Water Column (ft.) 10.73

One Well Volume (gal.) 1.82

One Annulus Vol. (gal.) _____

Qty. of Drilling Fluid Lost _____

Minimum Gal. to be Purged 18.0

Development Method Bail-Surge-Bail-pump

Purging Equipment SS Bailer-pump

Water Level Equipment Sri. nst

pH/EC Meter Horiba U10

Turbidity Meter Horiba U10

Other _____

Time	Amount Purged (gal.)	Field Parameters Measured							Comments	Field Tech.
		pH	EC	Turbidity	D.O.	D.O. Temp.	SAL.	GPM / W.L.		
12:40	10	7.41	1.03	>999	—	17.9	0.04	1/—	Bail-1GAL	
12:45	15	6.68	.818	471	—	17.8	0.04	1/—	Surge-12:11-12:22	
12:48	18	6.67	.721	86	—	17.9	0.04	.5/—	Bail-1GAL	

FINAL FIELD PARAMETER MEASUREMENTS

APPENDIX F

LICENSED LAND SURVEYOR'S REPORT

Mid Coast Engineers
Civil Engineers and Land Surveyors
70 Penny Lane, Suite A - Watsonville, CA 95076
Phone: (831) 724-2580
Fax: (831) 724-8025
e-mail: lee@midcoastengineers.com

Richard A. Wadsworth
Civil Engineer
Stanley O. Nielsen
Land Surveyor
Lee D. Vaage
Land Surveyor
Jeff S. Nielsen
Land Surveyor

Fax Transmittal

To:	**Jeff Gravesen**
Company:	KLEINFELDER
Fax Number:	925-484-5838
From:	**Lee Vaage**
Fax Number:	(831) 724-8025
Business Phone:	(831) 724-2580
Pages:	8, including cover page.
Date:	October 9, 2008
Subject:	CALTRANS, Sixth and Castro, Oakland

Note:

GeoTracker Reports

If you do not receive all pages in legible condition, please call.

Mid Coast Engineers
Civil Engineers and Land Surveyors
70 Penny Lane, Suite A - Watsonville, CA 95076
phone: (831) 724-2580
fax: (831) 724-8025
e-mail: lee@midcoastengineers.com

Richard A. Wadsworth
Civil Engineer
Stanley O. Nielsen
Land Surveyor
Lee D. Vaage
Land Surveyor
Jeff S. Nielsen
Land Surveyor

October 8, 2008

Jeff Gravesen
KLEINFELDER
7133 Koll Center Parkway, Suite 100
Pleasanton, CA 94566

Re: **CALTRANS District 4 Excess Land, Sixth Street and Castro Street, Oakland, California;** KLEINFELDER Project No. 94149, MCE Job No. 08135

Dear Mr. Gravesen,

As you requested, on September 24 we surveyed seven monitoring wells, six soil borings and eight trenches located at the referenced site. Our findings are shown on the attached sheets, expressed in State Plane Coordinates and Latitude/Longitude.

For the wells, a notch was cut in the north rim of the PVC casing (TOC) and a cross chiseled in the north rim of the standard box (TOB). Measurements for the borings were taken at ground level in the approximate center of the grout.

Measurements were obtained from conventional survey techniques in combination with GPS techniques (Code CGPS), using control points #1039 (HO14) and #1041 (H016), as shown on the map entitled "Record of Survey, Monumentation System for the Port of Oakland", R/S No. 990, filed in Book 18 of Survey, Pages 50-60, Alameda County Records. Latitude and Longitude as shown were determined from the California Coordinate System, Zone 3, NAD 83 Datum, using the California High Precision Geodetic Network, Epoch 1991.35. The accuracy range of the reported information is +/- 1cm. GPS equipment is the Trimble 5700/5800 system (Code T57).

The benchmark used for this survey is Control Point #1039 (H014), as listed in the above described map, a cut cross in the middle of a painted aerial premark on the Middle Harbor Road Overpass. Elevation = 44.55 feet, NAVD 88 datum.

Please let me know if you have questions or need additional information.

Yours truly,

Lee D. Vaage

LICENSED LAND SURVEYOR
LEE D. VAAGE
No. 5029
RENEWAL 12-31-09
STATE OF CALIFORNIA

CALTRANS DISTRICT 4 EXCESS LAND
Sixth Street and Castro Street
Oakland, California

KLEINFELDER Project No. 94149

Project : 08135
User name MCE Date & Time 10:02:58 AM 10/8/2008
Coordinate System US State Plane 1983 Zone California Zone 3 0403
Project Datum NAD 1983 (Conus)
Vertical Datum NAVD 88
Coordinate Units US survey feet
Distance Units US survey feet
Elevation Units US survey feet

Point Number	Northing	Easting	Elevation	Description
63	2119183.73	6046981.07	21.16	DP-1
64	2119158.29	6047029.21	21.31	DP-2
65	2119135.50	6047071.95	21.34	DP-3
66	2119112.26	6047119.22	21.52	DP-4
85	2119259.91	6047008.80	21.48	DP-5
58	2119304.84	6047004.43	22.26	PH-1
27	2119324.91	6047129.96	30.12	MW-1toc
28	2119325.05	6047130.08	30.56	MW-1tob
29	2119324.95	6047129.59	26.30	G
21	2119237.04	6047021.15	24.27	MW-2toc
22	2119237.28	6047021.28	24.59	MW-2tob
23	2119236.63	6047021.08	21.43	G
18	2119163.55	6047161.30	24.76	MW-3toc
19	2119163.68	6047161.42	25.36	MW-3tob
20	2119163.74	6047161.61	22.36	G
24	2119301.07	6047016.81	26.30	MW-4toc
25	2119301.25	6047016.89	26.37	MW-4tob
26	2119300.77	6047016.52	23.07	G
11	2119198.72	6047109.99	24.71	MW-5toc
12	2119198.97	6047110.07	24.95	MW-5tob
13	2119198.59	6047110.43	22.25	G
70	2119137.84	6047017.28	24.26	MW-6toc
71	2119138.19	6047017.16	24.66	MW-6tob
72	2119137.73	6047017.60	21.01	G
73	2119096.87	6047088.99	24.91	MW-7toc
74	2119097.06	6047088.96	24.91	MW-7tob
75	2119096.86	6047088.67	21.11	G

3	2119278.86	6047218.70	26.05	T-A-SW
4	2119295.04	6047229.05	26.91	T-A-NE
5	2119220.96	6047301.72	25.73	T-B-NE
6	2119196.60	6047284.85	25.04	T-B-SW
9	2119214.74	6047112.68	22.78	T-C-NE
10	2119195.85	6047102.52	21.79	T-C-SW
14	2119196.01	6047196.68	23.55	T-D1-NW
15	2119185.41	6047218.38	23.63	T-D1-SE
16	2119166.01	6047180.63	22.48	T-D2-SE
17	2119184.85	6047172.31	23.08	T-D2-NW
7	2119157.68	6047237.28	23.30	T-D3-E
8	2119149.40	6047215.10	23.06	T-D3-W
61	2119273.62	6046981.24	21.28	T-E1-NW
83	2119245.11	6047035.11	22.15	T-E1-SE
84	2119239.75	6047045.44	22.53	T-E1-EXT-SE
59	2119296.01	6046992.90	21.98	T-E2-NW
60	2119268.12	6047048.29	23.19	T-E2-SE
1002	2118506.76	6044498.29	44.55	GPS HO14

CALTRANS DISTRICT 4 EXCESS LAND
Sixth Street and Castro Street
Oakland, California

KLEINFELDER Project No. 94149

Project : 08135
User name MCE Date & Time 10:02:58 AM 10/8/2008
Coordinate System US State Plane 1983 Zone California Zone 3 0403
Project Datum NAD 1983 (Conus)
Vertical Datum NAVD 88
Coordinate Units US survey feet
Distance Units US survey feet
Elevation Units US survey feet

Point Number	Latitude	Longitude	Elevation	Description
63	37.801440992°N	122.281528731°W	21.16	DP-1
64	37.801373650°N	122.281360463°W	21.31	DP-2
65	37.801313312°N	122.281211064°W	21.34	DP-3
66	37.801251974°N	122.281045951°W	21.52	DP-4
85	37.801651617°N	122.281437786°W	21.48	DP-5
58	37.801774749°N	122.281455880°W	22.26	PH-1
27	37.801836443°N	122.281022794°W	30.12	MW-1toc
28	37.801836827°N	122.281022363°W	30.56	MW-1tob
29	37.801836512°N	122.281024052°W	26.30	G
21	37.801589455°N	122.281393547°W	24.27	MW-2toc
22	37.801590131°N	122.281393096°W	24.59	MW-2tob
23	37.801588351°N	122.281393761°W	21.43	G
18	37.801394994°N	122.280903688°W	24.76	MW-3toc
19	37.801395354°N	122.280903293°W	25.36	MW-3tob
20	37.801395529°N	122.280902655°W	22.36	G
24	37.801765056°N	122.281412763°W	26.30	MW-4toc
25	37.801765543°N	122.281412499°W	26.37	MW-4tob
26	37.801764226°N	122.281413774°W	23.07	G
11	37.801488880°N	122.281083577°W	24.71	MW-5toc
12	37.801489587°N	122.281083333°W	24.95	MW-5tob
13	37.801488557°N	122.281082051°W	22.25	G
70	37.801316865°N	122.281400386°W	24.26	MW-6toc
71	37.801317820°N	122.281400824°W	24.66	MW-6tob
72	37.801316584°N	122.281399288°W	21.01	G
73	37.801208137°N	122.281149537°W	24.91	MW-7toc
74	37.801208639°N	122.281149669°W	24.91	MW-7tob
75	37.801208095°N	122.281150653°W	21.11	G

3	37.801714611°N	122.280712657°W	26.05	T-A-SW
4	37.801759599°N	122.280677901°W	26.91	T-A-NE
5	37.801559990°N	122.280421560°W	25.73	T-B-NE
6	37.801492217°N	122.280478312°W	25.04	T-B-SW
9	37.801533021°N	122.281075326°W	22.78	T-C-NE
10	37.801480624°N	122.281109230°W	21.79	T-C-SW
14	37.801485981°N	122.280783413°W	23.55	T-D1-NW
15	37.801458016°N	122.280707629°W	23.63	T-D1-SE
16	37.801402763°N	122.280836964°W	22.48	T-D2-SE
17	37.801454067°N	122.280866997°W	23.08	T-D2-NW
7	37.801382860°N	122.280640394°W	23.30	T-D3-E
8	37.801358970°N	122.280716594°W	23.06	T-D3-W
61	37.801687817°N	122.281534073°W	21.28	T-E1-NW
83	37.801612360°N	122.281345773°W	22.15	T-E1-SE
84	37.801598169°N	122.281309666°W	22.53	T-E1-EXT-SE
59	37.801749907°N	122.281495194°W	21.98	T-E2-NW
60	37.801676227°N	122.281301660°W	23.19	T-E2-SE
1002	37.799452048°N	122.290075696°W	44.55	GPS HO14

	A	B	C	D	E	F	G	H	I	J	K	L
1	CALTRANS DISTRICT 4 EXCESS LAND											
2	Sixth Street and Castro Street											
3	Oakland, California											
4												
5	KLEINFELDER Project No. 94149											
6												
7	Project : 08135											
8	User name MCE		Date & Time		10:02:58 AM 10/8/2008							
9	Coordinate System		US State Plane 1983		Zone	California Zone 3 0403						
10	Project Datum		NAD 1983 (Conus)									
11	Vertical Datum		NAVD 88									
12	Coordinate Units		US survey feet									
13	Distance Units		US survey feet									
14	Elevation Units		US survey feet									
15												
16		DP-1	SB	09/24/2008	37.8014410	-122.2815287	CGPS	NAD83	1	Mid Coast Engineers	T57	ground
17		DP-2	SB	09/24/2008	37.8013737	-122.2813605	CGPS	NAD83	1	Mid Coast Engineers	T57	ground
18		DP-3	SB	09/24/2008	37.8013133	-122.2812111	CGPS	NAD83	1	Mid Coast Engineers	T57	ground
19		DP-4	SB	09/24/2008	37.8012520	-122.2810460	CGPS	NAD83	1	Mid Coast Engineers	T57	ground
20		DP-5	SB	09/24/2008	37.8016516	-122.2814378	CGPS	NAD83	1	Mid Coast Engineers	T57	ground
21		PH-1	SB	09/24/2008	37.8017747	-122.2814559	CGPS	NAD83	1	Mid Coast Engineers	T57	ground
22												
23		MW-1	MW	09/24/2008	37.8018364	-122.2810228	CGPS	NAD83	1	Mid Coast Engineers	T57	top of casing
24		MW-2	MW	09/24/2008	37.8015895	-122.2813935	CGPS	NAD83	1	Mid Coast Engineers	T57	top of casing
25		MW-3	MW	09/24/2008	37.8013950	-122.2809037	CGPS	NAD83	1	Mid Coast Engineers	T57	top of casing
26		MW-4	MW	09/24/2008	37.8017651	-122.2814128	CGPS	NAD83	1	Mid Coast Engineers	T57	top of casing
27		MW-5	MW	09/24/2008	37.8014889	-122.2810836	CGPS	NAD83	1	Mid Coast Engineers	T57	top of casing
28		MW-6	MW	09/24/2008	37.8013169	-122.2814004	CGPS	NAD83	1	Mid Coast Engineers	T57	top of casing
29		MW-7	MW	09/24/2008	37.8012081	-122.2811495	CGPS	NAD83	1	Mid Coast Engineers	T57	top of casing

CALTRANS DISTRICT 4 EXCESS LAND
Sixth Street and Castro Street
Oakland, California

KLEINFELDER Project No. 94149

Project : 08135
User name MCE Date & Time 10:02:58 AM 10/8/2008
Coordinate System US State Plane 1983 Zone California Zone 3 04
Project Datum NAD 1983 (Conus)
Vertical Datum NAVD 88
Coordinate Units US survey feet
Distance Units US survey feet
Elevation Units US survey feet

DP-1	09/24/2008	21.16	CGPS	88	0.5	Mid Coast Engineers
DP-2	09/24/2008	21.31	CGPS	88	0.5	Mid Coast Engineers
DP-3	09/24/2008	21.34	CGPS	88	0.5	Mid Coast Engineers
DP-4	09/24/2008	21.52	CGPS	88	0.5	Mid Coast Engineers
DP-5	09/24/2008	21.48	CGPS	88	0.5	Mid Coast Engineers
PH-1	09/24/2008	22.26	CGPS	88	0.5	Mid Coast Engineers
MW-1	09/24/2008	30.12	CGPS	88	0.5	Mid Coast Engineers
MW-2	09/24/2008	24.27	CGPS	88	0.5	Mid Coast Engineers
MW-3	09/24/2008	24.76	CGPS	88	0.5	Mid Coast Engineers
MW-4	09/24/2008	26.30	CGPS	88	0.5	Mid Coast Engineers
MW-5	09/24/2008	24.71	CGPS	88	0.5	Mid Coast Engineers
MW-6	09/24/2008	24.26	CGPS	88	0.5	Mid Coast Engineers
MW-7	09/24/2008	24.91	CGPS	88	0.5	Mid Coast Engineers

APPENDIX G

MONITORING WELL SAMPLING LOGS

KLEINFELDER
Bright People. Right Solutions.

MICRO-PURGE MONITORING WELL SAMPLING LOG

Date: 9/16/08 | Well No.: MW-1 | Sheet 1 of 1
Project: | Submitted by: | Date: 9/16/08
Project No.: | Reviewed by: | Date:
Weather OVER CAST / 58°

EQUIPMENT & DECONTAMINATION

Purging Eqpt: ☐ Bailer ☑ Disposable Bailer ☐ Bladder Pump ☐ Submersible Pump ☑ Peristaltic Pump ☐ Other

Sampling Eqpt ☐ Bailer ☑ Disposable Bailer ☐ Bladder Pump ☐ Submersible Pump ☑ Peristaltic Pump ☐ Other

Test Equipment Water Level Water Quality Meter Turbidity Meter
Meter No.
Calibration Date/Time

Decontamination Methods

	Wash	Rinse 1	Rinse 2	Rinse 3
☐ TSP	☐ DI ☐ Steam	☐ DI ☐ Steam	☐ DI ☐ Steam	☐ DI ☐ Steam
☐ Alconox	☐ Tap ☐ Hot	☐ Tap ☐ Hot	☐ Tap ☐ Hot	☐ Tap ☐ Hot
☐ Other _____	☐ Other ☐ Cool	☐ Other ☐ Cool	☐ Other ☐ Cool	☐ Other ☐ Cool

Volume (gal)
Source
Decon. Notes

WELL DEVELOPMENT & PURGE RECORD

Well Construction

Total Depth (ft): 22.95 Screened Interval (ft): _____ Intake Depth (ft): _____ Flow Rate (L/min): _____

Initial DTW (ft): 20.80 Final DTW (ft): 20.99 Total Volume Purged (gal): _____

Well Security ☑ Good ☐ Fair ☐ Poor **Well Integrity** ☐ Good ☐ Fair ☑ Poor **Locked?** ☑ Yes ☐ No

Product? ☑ None ☐ Free ☐ Floating ☐ Sheen ☐ Film _____ **Thickness (ft)** **Odor?** None

Purge Record

Reference: ☐ Top of Casing ☐ Other _____

Time	Temp (°C) obs	pH ±0.2	Conductivity (S/m) ±3%	DO (mg/L) ±10% or ±0.2	ORP (mV) obs	Turbidity (NTU) obs	DTW (ft)
0844	18.95	5.98	0.453	9.13	312.2	752	

☐ Continued on reverse

SAMPLE LOG

Sample No.	Time	Quantitiy	Volume	Type	Preserv.	Filtration	Analysis	Lab
MW-1	0850							

MISC

Other Observations:
FINAL TD: 22.91
PERISTALTIC PUMP DID NOT PULL, SWITCHED TO 1-INCH BAILER

Final Check: VOAs free of bubbles? ☑ Yes ☐ No ☐ NA Well Locked? ☑ Yes ☐ No ☐ NA

KLEINFELDER

WELL DEVELOPMENT AND SAMPLING LOG

Date: 9/16/08 **Well No.:** MW-7 **Sheet** 1 **of** 1

Project:

Project No.: 95539 **Sampled by:**

Weather

Purpose of Log: ☐ Development ☑ Sampling

EQUIPMENT & DECONTAMINATION

Purging Eqpt:	☐ Bailer	☑ Disposable Bailer	☐ Suction Pump	☐ Submersible Pump	☐ Vac Truck	☐ Other
Sampling Eqpt	☐ Bailer	☑ Disposable Bailer	☐ Suction Pump	☐ Submersible Pump	☐ Dedicated Pump	☐ Other

Test Equipment	Water Level	pH	Conductivity	Tubidity
Meter No.				
Calibration Date/Time				

Decontamination Methods	Wash	Rinse 1	Rinse 2	Rinse 3
☐ TSP	☐ DI ☐ Steam	☐ DI ☐ Steam	☑ DI ☐ Steam	☐ DI ☐ Steam
☑ Alconox	☑ Tap ☐ Hot	☑ Tap ☐ Hot	☐ Tap ☐ Hot	☐ Tap ☐ Hot
☐ Other _____	☐ Other ☐ Cool	☐ Other ☐ Cool	☐ Other ☐ Cool	☐ Other ☐ Cool
Volume (gal)	4.5	4.5	Spray	
Source	Zone 7	Zone 7	Alhambra	
Decon. Notes				

WELL DEVELOPMENT & PURGE RECORD

Well Development

Well Security ☑ Good ☐ Fair ☐ Poor **Well Integrity** ☑ Good ☐ Fair ☐ Poor **Locked?** ☑ Yes ☐ No

Purge Volume (CV)		TD	–	DTW	X	Factor	=	1 CV	3 CV	
Well Diameter	2"					0.175				
	4"	27.06 ft	–	16.42 ft	X	0.663	=	1.86	5.6	gallon(s)
	6"					1.469				

Product? ☐ None ☐ Free ☐ Floating ☐ Sheen ☐ Film _____ **Thickness (ft)** **Odor?**

Purge Record

Reference: ☑ Top of Casing ☐ Other _____

Time (24 hours)	0	2	4	6	-	-	-	REPLICATE
Gallons Purged	1251	1254	1300	1302	-	-	-	GOALS
pH	6.63	6.54	16.74	16.88	-	-	-	±0.10
Temperature (°C)	16.62	16.79	6.48	6.33	-	-	-	±1°C
Cond. (µS/cm)	0.629	0.730	0.785	0.529	-	-	-	±10%
DO (mg/L)	9.77	9.17	8.69	8.02	-	-	-	±10%
ORP (mV)	274.2	281.6	281.3	277.2	-	-	-	±10 mV
Turbity (NTU)	39.4	2423	>10,000	>10,000	-	-	-	<50 NTUs
Color					-	-	-	COLORLESS
Depth to Water (feet)		-	-	17.61	-	-	-	±0.01'

SAMPLE LOG

Sample No.	Time	Quantitiy	Volume	Type	Preserv.	Filtration	Analysis	Lab
MW-7	1305							

MISC

Other Observations:

Final Check: VOAs free of bubbles? ☐ Yes ☐ No ☐ NA Well Locked? ☑ Yes ☐ No ☐ NA

KLEINFELDER

WELL DEVELOPMENT AND SAMPLING LOG

Date: ~~AUG~~ 9/16/08 **Well No.:** MW-6 **Sheet** 1 **of** 1

Project:

Project No.: 95539 **Sampled by:**

Weather

Purpose of Log: ☐ Development ☑ Sampling

EQUIPMENT & DECONTAMINATION

Purging Eqpt: ☐ Bailer ☑ Disposable Bailer ☐ Suction Pump ☐ Submersible Pump ☐ Vac Truck ☐ Other

Sampling Eqpt ☐ Bailer ☑ Disposable Bailer ☐ Suction Pump ☐ Submersible Pump ☐ Dedicated Pump ☐ Other

Test Equipment	Water Level	pH	Conductivity	Tubidity
Meter No.				
Calibration Date/Time				

Decontamination Methods	Wash	Rinse 1	Rinse 2	Rinse 3
☐ TSP	☐ DI ☐ Steam	☐ DI ☐ Steam	☑ DI ☐ Steam	☐ DI ☐ Steam
☑ Alconox	☑ Tap ☐ Hot	☑ Tap ☐ Hot	☐ Tap ☐ Hot	☐ Tap ☐ Hot
☐ Other _____	☐ Other ☐ Cool	☐ Other ☐ Cool	☐ Other ☐ Cool	☐ Other ☐ Cool
Volume (gal)	4.5	4.5	Spray	
Source	Zone 7	Zone 7	Alhambra	
Decon. Notes				

WELL DEVELOPMENT & PURGE RECORD

Well Development

Well Security ☑ Good ☐ Fair ☐ Poor **Well Integrity** ☑ Good ☐ Fair ☐ Poor **Locked?** ☑ Yes ☐ No

Purge Volume (CV) TD – DTW X Factor = 1 CV 3 CV

Well Diameter 2" 4" 6" 26.48 ft – 15.74 ft X 0.175 0.663 1.469 = 1.88 5.75 gallon(s)

Product? ☑ None ☐ Free ☐ Floating ☐ Sheen ☐ Film — **Thickness (ft)** **Odor?** —

Purge Record

Reference: ☑ Top of Casing ☐ Other _____

Time (24 hours)	1220	1223	1227	1231	-	-	-	REPLICATE
Gallons Purged	0	2	4	5.75	-	-	-	GOALS
pH	6.58	6.53	6.49	6.58	-	-	-	±0.10
Temperature (°C)	17.45	17.35	17.17	17.18	-	-	-	±1°C
Cond. (µS/cm)	0.499	0.545	0.528	0.607	-	-	-	±10%
DO (mg/L)	8.60	8.01	7.63	8.34	-	-	-	±10%
ORP (mV)	274.8	280.0	277.5	278.2	-	-	-	±10 mV
Turbity (NTU)	19.4	1402	7755	>10,000	-	-	-	<50 NTUs
Color					-	-	-	COLORLESS
Depth to Water (feet)		-	-	16.30	-	-	-	±0.01'

SAMPLE LOG

Sample No.	Time	Quantitiy	Volume	Type	Preserv.	Filtration	Analysis	Lab
MW-6	1235							

MISC

Other Observations:

Final Check: VOAs free of bubbles? ☑ Yes ☐ No ☐ NA Well Locked? ☑ Yes ☐ No ☐ NA

KLEINFELDER

WELL DEVELOPMENT AND SAMPLING LOG

Date: 9/16/08 Well No.: MW-3 Sheet 1 of 1

Project: 95539

Project No.:

Sampled by: J. Gerhegen / J. Williams

Weather PTLY CLDY / 670°

Purpose of Log: ☐ Development ☑ Sampling

EQUIPMENT & DECONTAMINATION

Purging Eqpt:	☐ Bailer	☑ Disposable Bailer	☐ Suction Pump	☐ Submersible Pump	☐ Vac Truck	☐ Other
Sampling Eqpt	☐ Bailer	☑ Disposable Bailer	☐ Suction Pump	☐ Submersible Pump	☐ Dedicated Pump	☐ Other

Test Equipment	Water Level	pH	Conductivity	Tubidity
Meter No.				
Calibration Date/Time				

Decontamination Methods	Wash	Rinse 1	Rinse 2	Rinse 3
☐ TSP	☐ DI ☐ Steam	☐ DI ☐ Steam	☑ DI ☐ Steam	☐ DI ☐ Steam
☑ Alconox	☑ Tap ☐ Hot	☑ Tap ☐ Hot	☐ Tap ☐ Hot	☐ Tap ☐ Hot
☐ Other _____	☐ Other ☐ Cool	☐ Other ☐ Cool	☐ Other ☐ Cool	☐ Other ☐ Cool
Volume (gal)	4.5	4.5	Spray	
Source	Zone 7	Zone 7	Alhambra	
Decon. Notes				

WELL DEVELOPMENT & PURGE RECORD

Well Development

Well Security ☑ Good ☐ Fair ☐ Poor Well Integrity ☑ Good ☐ Fair ☐ Poor Locked? ☑ Yes ☐ No

Purge Volume (CV)	TD	–	DTW	X	Factor	=	1 CV	3 CV
Well Diameter 2" / 4" / 6"	23.22 ft	–	15.92 ft	X	0.175 / 0.663 / 1.469	=	1.28	4 gallon(s)

Product? ☑ None ☐ Free ☐ Floating ☐ Sheen ☐ Film — Thickness (ft) Odor? —

Purge Record

Reference: ☑ Top of Casing ☐ Other _____

Time (24 hours)	0	1.5	3	4	-	-	-	REPLICATE
Gallons Purged	1138	1141	1145	1147	-	-	-	GOALS
pH	6.45	~~6.03~~ 6.20	6.28	6.21	-	-	-	±0.10
Temperature (°C)	20.47	20.08	20.06	20.03	-	-	-	±1°C
Cond. (µS/cm)	0.352	0.391	0.398	0.391	-	-	-	±10%
DO (mg/L)	8.54	6.93	6.80	6.42	-	-	-	±10%
ORP (mV)	247.1	258.8	263.8	263.7	-	-	-	±10 mV
Turbity (NTU)	41.2	1884	4008	2490	-	-	-	<50 NTUs
Color					-	-	-	COLORLESS
Depth to Water (feet)		-	-		-	-	-	±0.01'

SAMPLE LOG

Sample No.	Time	Quantitiy	Volume	Type	Preserv.	Filtration	Analysis	Lab
MW-3	1150							

MISC

Other Observations:

Final Check: VOAs free of bubbles? ☑ Yes ☐ No ☐ NA Well Locked? ☑ Yes ☐ No ☐ NA

KLEINFELDER

WELL DEVELOPMENT AND SAMPLING LOG

Date: 9/16/08 **Well No.:** MW-5 **Sheet** 1 **of** 1

Project:

Project No.: **Sampled by:**

Weather

Purpose of Log: ☐ Development ☑ Sampling

EQUIPMENT & DECONTAMINATION

Purging Eqpt:	☐ Bailer	☐ Disposable Bailer	☐ Suction Pump	☐ Submersible Pump	☐ Vac Truck	☐ Other
Sampling Eqpt	☐ Bailer	☐ Disposable Bailer	☐ Suction Pump	☐ Submersible Pump	☐ Dedicated Pump	☐ Other

Test Equipment	Water Level	pH	Conductivity	Tubidity
Meter No.				
Calibration Date/Time				

Decontamination Methods	Wash	Rinse 1	Rinse 2	Rinse 3
☐ TSP	☐ DI ☐ Steam	☐ DI ☐ Steam	☑ DI ☐ Steam	☐ DI ☐ Steam
☑ Alconox	☑ Tap ☐ Hot	☑ Tap ☐ Hot	☐ Tap ☐ Hot	☐ Tap ☐ Hot
☐ Other _____	☐ Other ☐ Cool	☐ Other ☐ Cool	☐ Other ☐ Cool	☐ Other ☐ Cool
Volume (gal)	4.5	4.5	Spray	
Source	Zone 7	Zone 7	Alhambra	
Decon. Notes				

WELL DEVELOPMENT & PURGE RECORD

Well Development

Well Security ☐ Good ☐ Fair ☐ Poor **Well Integrity** ☐ Good ☐ Fair ☐ Poor **Locked?** ☐ Yes ☐ No

Purge Volume (CV)	TD	–	DTW	X	Factor	=	1 CV	3 CV	
Well Diameter 2"					0.175				
4"	25.37 ft	–	15.87 ft	X	0.663	=	1.669	5.0	gallon(s)
6"	= 9.50				1.469				

Product? ☑ None ☐ Free ☐ Floating ☐ Sheen ☐ Film _____ **Thickness (ft)** **Odor?** no

Purge Record

Reference: ☑ Top of Casing ☐ Other _____

Time (24 hours)	0	2	3.5	5.0	-	-	-	REPLICATE
Gallons Purged	11.08	11.11	11.14	11.17	-	-	-	GOALS
pH	6.46	6.40	6.47	6.32	-	-	-	±0.10
Temperature (°C)	20.64	19.70	19.34	19.79	-	-	-	±1°C
Cond. (µS/cm)	.515	.670	.665	.683	-	-	-	±10%
DO (mg/L)	7.~~[illegible]~~	7.21	6.80	6.22	-	-	-	±10%
ORP (mV)	219.9	242.3	248.7	254.9	-	-	-	±10 mV
Turbity (NTU)	26.3	>10K	>10K	>10K	-	-	-	<50 NTUs
Color				Tan	-	-	-	COLORLESS
Depth to Water (feet)		-	-	16.00	-	-	-	±0.01'

SAMPLE LOG

Sample No.	Time	Quantitiy	Volume	Type	Preserv.	Filtration	Analysis	Lab
MW-5	1120							

MISC

Other Observations:

Final Check: VOAs free of bubbles? ☑ Yes ☐ No ☐ NA Well Locked? ☐ Yes ☐ No ☐ NA

KLEINFELDER

WELL DEVELOPMENT AND SAMPLING LOG

Date: 9/16/08 Well No.: MW-2 Sheet 1 of 1

Project:

Project No.: Sampled by:

Weather

Purpose of Log: ☐ Development ☑ Sampling

EQUIPMENT & DECONTAMINATION

Purging Eqpt:	☐ Bailer	☐ Disposable Bailer	☐ Suction Pump	☐ Submersible Pump	☐ Vac Truck	☐ Other
Sampling Eqpt	☐ Bailer	☐ Disposable Bailer	☐ Suction Pump	☐ Submersible Pump	☐ Dedicated Pump	☐ Other

Test Equipment	Water Level	pH	Conductivity	Tubidity
Meter No.				
Calibration Date/Time				

Decontamination Methods	Wash	Rinse 1	Rinse 2	Rinse 3
☐ TSP	☐ DI ☐ Steam	☐ DI ☐ Steam	☑ DI ☐ Steam	☐ DI ☐ Steam
☑ Alconox	☑ Tap ☐ Hot	☑ Tap ☐ Hot	☐ Tap ☐ Hot	☐ Tap ☐ Hot
☐ Other _____	☐ Other ☐ Cool	☐ Other ☐ Cool	☐ Other ☐ Cool	☐ Other ☐ Cool
Volume (gal)	4.5	4.5	Spray	
Source	Zone 7	Zone 7	Alhambra	
Decon. Notes				

WELL DEVELOPMENT & PURGE RECORD

Well Development 7.39 x .175 = 1.3 x3 = 4.0

Well Security ☑ Good ☐ Fair ☐ Poor Well Integrity ☑ Good ☐ Fair ☐ Poor Locked? ☑ Yes ☐ No

Purge Volume (CV)		TD	–	DTW	X	Factor	=	1 CV	3 CV	
Well Diameter	2"					0.175				
	4"	22.87 ft	–	15.48 ft	X	0.663	=	1.3	4.0	gallon(s)
	6"	= 7.39				1.469				

Product? ☐ None ☐ Free ☐ Floating ☐ Sheen ☐ Film _____ Thickness (ft) Odor? HC

Purge Record

Reference: ☑ Top of Casing ☐ Other _____

Time (24 hours)	1016	1019	1022	1027	-	-	-	REPLICATE
Gallons Purged	0	1.5	3.0	4.0	-	-	-	GOALS
pH	6.28	6.24	6.27	6.29	-	-	-	±0.10
Temperature (°C)	21.25	20.79	20.29	20.19	-	-	-	±1°C
Cond. (~~µS/cm~~) mS	0.339	0.372	0.453	0.451	-	-	-	±10%
DO (mg/L)	6.10	6.01	5.95	5.74	-	-	-	±10%
ORP (mV)	208.2	186.2	155.7	141.0	-	-	-	±10 mV
Turbity (NTU)	111	6348	>10K	>10K	-	-	-	<50 NTUs
Color	gry	dk gray	dk gray	dk gray	-	-	-	COLORLESS
Depth to Water (feet)		-	-	15.66	-	-	-	±0.01'

SAMPLE LOG

Sample No.	Time	Quantitiy	Volume	Type	Preserv.	Filtration	Analysis	Lab
MW-2	1030							

MISC

Other Observations:

Final Check: VOAs free of bubbles? ☑ Yes ☐ No ☐ NA Well Locked? ☐ Yes ☐ No ☐ NA

KLEINFELDER
Bright People. Right Solutions.

MICRO-PURGE MONITORING WELL SAMPLING LOG

Date: 9/16/08 | Well No.: MW-4 | Sheet 1 of 1
Project: | Submitted by: | Date:
Project No.: | Reviewed by: | Date:
Weather OVERCAST / 60°

EQUIPMENT & DECONTAMINATION

Purging Eqpt: ☐ Bailer ☐ Disposable Bailer ☐ Bladder Pump ☐ Submersible Pump ☐ Peristaltic Pump ☐ Other

Sampling Eqpt ☐ Bailer ☐ Disposable Bailer ☐ Bladder Pump ☐ Submersible Pump ☐ Peristaltic Pump ☐ Other

Test Equipment Water Level Water Quality Meter Turbidity Meter
Meter No.
Calibration Date/Time

Decontamination Methods

	Wash	Rinse 1	Rinse 2	Rinse 3
☐ TSP	☐ DI ☐ Steam	☐ DI ☐ Steam	☐ DI ☐ Steam	☐ DI ☐ Steam
☐ Alconox	☐ Tap ☐ Hot	☐ Tap ☐ Hot	☐ Tap ☐ Hot	☐ Tap ☐ Hot
☐ Other _____	☐ Other ☐ Cool	☐ Other ☐ Cool	☐ Other ☐ Cool	☐ Other ☐ Cool

Volume (gal)
Source
Decon. Notes

WELL DEVELOPMENT & PURGE RECORD

Well Construction 9.06 x .175 = 1.58 g x 3 = 4.75 ~5 gal

Total Depth (ft): 26.35 Screened Interval (ft): _____ Intake Depth (ft): _____ Flow Rate (L/min): _____

Initial DTW (ft): 17.29 Final DTW (ft): _____ Total Volume Purged (gal): 5.0

Well Security ☑ Good ☐ Fair ☐ Poor **Well Integrity** ☑ Good ☐ Fair ☐ Poor **Locked?** ☑ Yes ☐ No

Product? ☑ None ☐ Free ☐ Floating ☐ Sheen ☐ Film _____ **Thickness (ft)** **Odor?**

Purge Record
Reference: ☐ Top of Casing ☐ Other _____

Time	Temp (°C)	pH	Conductivity (S/m)	DO (mg/L)	ORP (mV)	Turbidity (NTU)	DTW (ft)
AMS Para	obs	±0.2	±3%	±10% or ±0.2	obs	obs	
0 9:33	18.81	6.67	.718	9.25	293.2		
1.5 9:36	18.66	6.58	.771	8.80	293.7	798	
3.5 9:40	18.42	6.51	.795	8.23	293.0	7693	
5.0 9:44	18.32	6.42	.799	7.75	290.5	14.0	17.32

☐ Continued on reverse

SAMPLE LOG

Sample No.	Time	Quantitiy	Volume	Type	Preserv.	Filtration	Analysis	Lab
MW-4	950							

MISC

Other Observations: Peristaltic pump would not suck water used disp bailer
26.35 TD after smpl

Final Check: VOAs free of bubbles? ☑ Yes ☐ No ☐ NA Well Locked? ☐ Yes ☐ No ☐ NA

APPENDIX H

LABORATORY ANALYTICAL RESULTS

Torrent
LABORATORY, INC.

September 10, 2008

Charlie Almestad
KLEINFELDER
1970 Broadway, Suite 710
Oakland, CA 94612

TEL: (510) 628-9000
FAX (510) 628-9009

RE: 95539

Order No.: 0809003

Dear Charlie Almestad:

Torrent Laboratory, Inc. received 8 samples on 9/3/2008 for the analyses presented in the following report.

All data for associated QC met EPA or laboratory specification(s) except where noted in the case narrative.
Reported data is applicable for only the samples received as part of the order number referenced above.

Torrent Laboratory, Inc, is certified by the State of California, ELAP #1991. If you have any questions regarding these tests results, please feel free to contact the Project Management Team at (408)263-5258;ext: 204.

Sincerely,

Laboratory Director

9/10/08
Date

Patti Sandrock
QA Officer

Torrent
LABORATORY, INC.

Torrent Laboratory, Inc.

Date: *10-Sep-08*

CLIENT: KLEINFELDER
Project: 95539
Lab Order: 0809003

CASE NARRATIVE

Analytical Coment for EPA 8015B, Note: Due to extraction error, no LCS/LCSD are available for QC Prep Batch ID SDSG080904A. However, a Method Blank, Matrix Spike and Matrix Spike duplicate were extracted and analyzed and all fall within the laboratory control limits. No additional corrective action is required.

483 Sinclair Frontage Rd., Milpitas, CA 95035 | tel: 408.263.5258 | fax: 408.263.8293 | www.torrentlab.com

TORRENT LABORATORY, INC.

483 Sinclair Frontage Road • Milpitas, CA • Phone: (408) 263-5258 • Fax: (408) 263-8293

Visit us at www.torrentlab.com email: analysis@torrentlab.com

Report prepared for: Charlie Almestad
KLEINFELDER

Date Received: 9/3/2008
Date Reported: 9/10/2008

Client Sample ID: DP-4-12
Sample Location: CTO
Sample Matrix: SOIL
Date/Time Sampled 9/2/2008 7:45:00 AM

Lab Sample ID: 0809003-001
Date Prepared: 9/8/2008

Parameters	Analysis Method	Date Analyzed	RL	Dilution Factor	MRL	Result	Units	Analytical Batch
TPH (Diesel-SG)	SW8015B	9/5/2008	2	1	2.00	ND	mg/Kg	R17229
Surr: Pentacosane	SW8015B	9/5/2008	0	1	61.5-133	79.9	%REC	R17229
TPH (Gasoline)	SW8015B	9/8/2008	0.1	1	0.100	ND	mg/Kg	R17253
Surr: Trifluorotoluene	SW8015B	9/8/2008	0	1	65-135	90.1	%REC	R17253

These analyses were performed according to State of California Environmental Laboratory Accreditation program, Certificate # 1991

Report prepared for: Charlie Almestad
KLEINFELDER

Date Received: 9/3/2008
Date Reported: 9/10/2008

Client Sample ID: DP-4-12
Sample Location: CTO
Sample Matrix: SOIL
Date/Time Sampled 9/2/2008 7:45:00 AM

Lab Sample ID: 0809003-001
Date Prepared: 9/8/2008

Parameters	Analysis Method	Date Analyzed	RL	Dilution Factor	MRL	Result	Units	Analytical Batch
1,1,1,2-Tetrachloroethane	SW8260B	9/8/2008	10	1	10	ND	µg/Kg	R17247
1,1,1-Trichloroethane	SW8260B	9/8/2008	10	1	10	ND	µg/Kg	R17247
1,1,2,2-Tetrachloroethane	SW8260B	9/8/2008	10	1	10	ND	µg/Kg	R17247
1,1,2-Trichloroethane	SW8260B	9/8/2008	10	1	10	ND	µg/Kg	R17247
1,1-Dichloroethane	SW8260B	9/8/2008	10	1	10	ND	µg/Kg	R17247
1,1-Dichloroethene	SW8260B	9/8/2008	10	1	10	ND	µg/Kg	R17247
1,1-Dichloropropene	SW8260B	9/8/2008	10	1	10	ND	µg/Kg	R17247
1,2,3-Trichlorobenzene	SW8260B	9/8/2008	10	1	10	ND	µg/Kg	R17247
1,2,3-Trichloropropane	SW8260B	9/8/2008	10	1	10	ND	µg/Kg	R17247
1,2,4-Trichlorobenzene	SW8260B	9/8/2008	10	1	10	ND	µg/Kg	R17247
1,2,4-Trimethylbenzene	SW8260B	9/8/2008	10	1	10	ND	µg/Kg	R17247
1,2-Dibromo-3-chloropropane	SW8260B	9/8/2008	10	1	10	ND	µg/Kg	R17247
1,2-Dibromoethane (EDB)	SW8260B	9/8/2008	10	1	10	ND	µg/Kg	R17247
1,2-Dichlorobenzene	SW8260B	9/8/2008	10	1	10	ND	µg/Kg	R17247
1,2-Dichloroethane (EDC)	SW8260B	9/8/2008	10	1	10	ND	µg/Kg	R17247
1,2-Dichloropropane	SW8260B	9/8/2008	10	1	10	ND	µg/Kg	R17247
1,3,5-Trimethylbenzene	SW8260B	9/8/2008	10	1	10	ND	µg/Kg	R17247
1,3-Dichlorobenzene	SW8260B	9/8/2008	10	1	10	ND	µg/Kg	R17247
1,4-Dichlorobenzene	SW8260B	9/8/2008	10	1	10	ND	µg/Kg	R17247
2,2-Dichloropropane	SW8260B	9/8/2008	10	1	10	ND	µg/Kg	R17247
2-Chloroethyl vinyl ether	SW8260B	9/8/2008	10	1	10	ND	µg/Kg	R17247
2-Chlorotoluene	SW8260B	9/8/2008	10	1	10	ND	µg/Kg	R17247
4-Chlorotoluene	SW8260B	9/8/2008	10	1	10	ND	µg/Kg	R17247
4-Isopropyltoluene	SW8260B	9/8/2008	10	1	10	ND	µg/Kg	R17247
Benzene	SW8260B	9/8/2008	10	1	10	ND	µg/Kg	R17247
Bromobenzene	SW8260B	9/8/2008	10	1	10	ND	µg/Kg	R17247
Bromochloromethane	SW8260B	9/8/2008	10	1	10	ND	µg/Kg	R17247
Bromodichloromethane	SW8260B	9/8/2008	10	1	10	ND	µg/Kg	R17247
Bromoform	SW8260B	9/8/2008	10	1	10	ND	µg/Kg	R17247
Bromomethane	SW8260B	9/8/2008	10	1	10	ND	µg/Kg	R17247
Carbon tetrachloride	SW8260B	9/8/2008	10	1	10	ND	µg/Kg	R17247
Chlorobenzene	SW8260B	9/8/2008	10	1	10	ND	µg/Kg	R17247
Chloroform	SW8260B	9/8/2008	10	1	10	ND	µg/Kg	R17247
Chloromethane	SW8260B	9/8/2008	10	1	10	ND	µg/Kg	R17247
cis-1,2-Dichloroethene	SW8260B	9/8/2008	10	1	10	ND	µg/Kg	R17247
cis-1,3-Dichloropropene	SW8260B	9/8/2008	10	1	10	ND	µg/Kg	R17247
Dibromochloromethane	SW8260B	9/8/2008	10	1	10	ND	µg/Kg	R17247
Dibromomethane	SW8260B	9/8/2008	10	1	10	ND	µg/Kg	R17247
Dichlorodifluoromethane	SW8260B	9/8/2008	10	1	10	ND	µg/Kg	R17247
Ethyl tert-butyl ether (ETBE)	SW8260B	9/8/2008	10	1	10	ND	µg/Kg	R17247
Ethylbenzene	SW8260B	9/8/2008	10	1	10	ND	µg/Kg	R17247
Freon-113	SW8260B	9/8/2008	10	1	10	ND	µg/Kg	R17247
Hexachlorobutadiene	SW8260B	9/8/2008	10	1	10	ND	µg/Kg	R17247

These analyses were performed according to State of California Environmental Laboratory Accreditation program, Certificate # 1991

Report prepared for: Charlie Almestad
KLEINFELDER

Date Received: 9/3/2008
Date Reported: 9/10/2008

Client Sample ID: DP-4-12
Sample Location: CTO
Sample Matrix: SOIL
Date/Time Sampled 9/2/2008 7:45:00 AM

Lab Sample ID: 0809003-001
Date Prepared: 9/8/2008

Parameters	Analysis Method	Date Analyzed	RL	Dilution Factor	MRL	Result	Units	Analytical Batch
Isopropyl Ether	SW8260B	9/8/2008	10	1	10	ND	µg/Kg	R17247
Isopropylbenzene	SW8260B	9/8/2008	10	1	10	ND	µg/Kg	R17247
Methyl tert-butyl ether (MTBE)	SW8260B	9/8/2008	10	1	10	ND	µg/Kg	R17247
Methylene chloride	SW8260B	9/8/2008	50	1	50	ND	µg/Kg	R17247
Naphthalene	SW8260B	9/8/2008	20	1	20	ND	µg/Kg	R17247
n-Butylbenzene	SW8260B	9/8/2008	10	1	10	ND	µg/Kg	R17247
n-Propylbenzene	SW8260B	9/8/2008	10	1	10	ND	µg/Kg	R17247
sec-Butylbenzene	SW8260B	9/8/2008	10	1	10	ND	µg/Kg	R17247
Styrene	SW8260B	9/8/2008	10	1	10	ND	µg/Kg	R17247
t-Butyl alcohol (t-Butanol)	SW8260B	9/8/2008	50	1	50	ND	µg/Kg	R17247
tert-Amyl methyl ether (TAME)	SW8260B	9/8/2008	10	1	10	ND	µg/Kg	R17247
tert-Butylbenzene	SW8260B	9/8/2008	10	1	10	ND	µg/Kg	R17247
Tetrachloroethene	SW8260B	9/8/2008	10	1	10	ND	µg/Kg	R17247
Toluene	SW8260B	9/8/2008	10	1	10	ND	µg/Kg	R17247
trans-1,2-Dichloroethene	SW8260B	9/8/2008	10	1	10	ND	µg/Kg	R17247
trans-1,3-Dichloropropene	SW8260B	9/8/2008	10	1	10	ND	µg/Kg	R17247
Trichloroethene	SW8260B	9/8/2008	10	1	10	ND	µg/Kg	R17247
Trichlorofluoromethane	SW8260B	9/8/2008	10	1	10	ND	µg/Kg	R17247
Vinyl chloride	SW8260B	9/8/2008	10	1	10	ND	µg/Kg	R17247
Xylenes, Total	SW8260B	9/8/2008	15	1	15	ND	µg/Kg	R17247
Surr: 4-Bromofluorobenzene	SW8260B	9/8/2008	0	1	55.8-141	88.6	%REC	R17247
Surr: Dibromofluoromethane	SW8260B	9/8/2008	0	1	59.8-148	109	%REC	R17247
Surr: Toluene-d8	SW8260B	9/8/2008	0	1	55.2-133	86.7	%REC	R17247
Total Organic Carbon	SW9060	9/5/2008	25	1	25	ND	mg/Kg	R17242

These analyses were performed according to State of California Environmental Laboratory Accreditation program, Certificate # 1991

Report prepared for: Charlie Almestad
KLEINFELDER

Date Received: 9/3/2008
Date Reported: 9/10/2008

Client Sample ID: DP-3-12
Sample Location: CTO
Sample Matrix: SOIL
Date/Time Sampled 9/2/2008 8:30:00 AM

Lab Sample ID: 0809003-002
Date Prepared: 9/8/2008

Parameters	Analysis Method	Date Analyzed	RL	Dilution Factor	MRL	Result	Units	Analytical Batch
TPH (Diesel-SG)	SW8015B	9/8/2008	2	1	2.00	ND	mg/Kg	R17229
Surr: Pentacosane	SW8015B	9/8/2008	0	1	61.5-133	74.4	%REC	R17229
TPH (Gasoline)	SW8015B	9/8/2008	0.1	1	0.100	ND	mg/Kg	R17253
Surr: Trifluorotoluene	SW8015B	9/8/2008	0	1	65-135	91.3	%REC	R17253

These analyses were performed according to State of California Environmental Laboratory Accreditation program, Certificate # 1991

Report prepared for: Charlie Almestad
KLEINFELDER

Date Received: 9/3/2008
Date Reported: 9/10/2008

Client Sample ID: DP-3-12
Sample Location: CTO
Sample Matrix: SOIL
Date/Time Sampled 9/2/2008 8:30:00 AM

Lab Sample ID: 0809003-002
Date Prepared: 9/8/2008

Parameters	Analysis Method	Date Analyzed	RL	Dilution Factor	MRL	Result	Units	Analytical Batch
1,1,1,2-Tetrachloroethane	SW8260B	9/8/2008	10	1	10	ND	µg/Kg	R17247
1,1,1-Trichloroethane	SW8260B	9/8/2008	10	1	10	ND	µg/Kg	R17247
1,1,2,2-Tetrachloroethane	SW8260B	9/8/2008	10	1	10	ND	µg/Kg	R17247
1,1,2-Trichloroethane	SW8260B	9/8/2008	10	1	10	ND	µg/Kg	R17247
1,1-Dichloroethane	SW8260B	9/8/2008	10	1	10	ND	µg/Kg	R17247
1,1-Dichloroethene	SW8260B	9/8/2008	10	1	10	ND	µg/Kg	R17247
1,1-Dichloropropene	SW8260B	9/8/2008	10	1	10	ND	µg/Kg	R17247
1,2,3-Trichlorobenzene	SW8260B	9/8/2008	10	1	10	ND	µg/Kg	R17247
1,2,3-Trichloropropane	SW8260B	9/8/2008	10	1	10	ND	µg/Kg	R17247
1,2,4-Trichlorobenzene	SW8260B	9/8/2008	10	1	10	ND	µg/Kg	R17247
1,2,4-Trimethylbenzene	SW8260B	9/8/2008	10	1	10	ND	µg/Kg	R17247
1,2-Dibromo-3-chloropropane	SW8260B	9/8/2008	10	1	10	ND	µg/Kg	R17247
1,2-Dibromoethane (EDB)	SW8260B	9/8/2008	10	1	10	ND	µg/Kg	R17247
1,2-Dichlorobenzene	SW8260B	9/8/2008	10	1	10	ND	µg/Kg	R17247
1,2-Dichloroethane (EDC)	SW8260B	9/8/2008	10	1	10	ND	µg/Kg	R17247
1,2-Dichloropropane	SW8260B	9/8/2008	10	1	10	ND	µg/Kg	R17247
1,3,5-Trimethylbenzene	SW8260B	9/8/2008	10	1	10	ND	µg/Kg	R17247
1,3-Dichlorobenzene	SW8260B	9/8/2008	10	1	10	ND	µg/Kg	R17247
1,4-Dichlorobenzene	SW8260B	9/8/2008	10	1	10	ND	µg/Kg	R17247
2,2-Dichloropropane	SW8260B	9/8/2008	10	1	10	ND	µg/Kg	R17247
2-Chloroethyl vinyl ether	SW8260B	9/8/2008	10	1	10	ND	µg/Kg	R17247
2-Chlorotoluene	SW8260B	9/8/2008	10	1	10	ND	µg/Kg	R17247
4-Chlorotoluene	SW8260B	9/8/2008	10	1	10	ND	µg/Kg	R17247
4-Isopropyltoluene	SW8260B	9/8/2008	10	1	10	ND	µg/Kg	R17247
Benzene	SW8260B	9/8/2008	10	1	10	ND	µg/Kg	R17247
Bromobenzene	SW8260B	9/8/2008	10	1	10	ND	µg/Kg	R17247
Bromochloromethane	SW8260B	9/8/2008	10	1	10	ND	µg/Kg	R17247
Bromodichloromethane	SW8260B	9/8/2008	10	1	10	ND	µg/Kg	R17247
Bromoform	SW8260B	9/8/2008	10	1	10	ND	µg/Kg	R17247
Bromomethane	SW8260B	9/8/2008	10	1	10	ND	µg/Kg	R17247
Carbon tetrachloride	SW8260B	9/8/2008	10	1	10	ND	µg/Kg	R17247
Chlorobenzene	SW8260B	9/8/2008	10	1	10	ND	µg/Kg	R17247
Chloroform	SW8260B	9/8/2008	10	1	10	ND	µg/Kg	R17247
Chloromethane	SW8260B	9/8/2008	10	1	10	ND	µg/Kg	R17247
cis-1,2-Dichloroethene	SW8260B	9/8/2008	10	1	10	ND	µg/Kg	R17247
cis-1,3-Dichloropropene	SW8260B	9/8/2008	10	1	10	ND	µg/Kg	R17247
Dibromochloromethane	SW8260B	9/8/2008	10	1	10	ND	µg/Kg	R17247
Dibromomethane	SW8260B	9/8/2008	10	1	10	ND	µg/Kg	R17247
Dichlorodifluoromethane	SW8260B	9/8/2008	10	1	10	ND	µg/Kg	R17247
Ethyl tert-butyl ether (ETBE)	SW8260B	9/8/2008	10	1	10	ND	µg/Kg	R17247
Ethylbenzene	SW8260B	9/8/2008	10	1	10	ND	µg/Kg	R17247
Freon-113	SW8260B	9/8/2008	10	1	10	ND	µg/Kg	R17247
Hexachlorobutadiene	SW8260B	9/8/2008	10	1	10	ND	µg/Kg	R17247

These analyses were performed according to State of California Environmental Laboratory Accreditation program, Certificate # 1991

Report prepared for: Charlie Almestad
KLEINFELDER

Date Received: 9/3/2008
Date Reported: 9/10/2008

Client Sample ID: DP-3-12
Sample Location: CTO
Sample Matrix: SOIL
Date/Time Sampled 9/2/2008 8:30:00 AM

Lab Sample ID: 0809003-002
Date Prepared: 9/8/2008

Parameters	Analysis Method	Date Analyzed	RL	Dilution Factor	MRL	Result	Units	Analytical Batch
Isopropyl Ether	SW8260B	9/8/2008	10	1	10	ND	µg/Kg	R17247
Isopropylbenzene	SW8260B	9/8/2008	10	1	10	ND	µg/Kg	R17247
Methyl tert-butyl ether (MTBE)	SW8260B	9/8/2008	10	1	10	ND	µg/Kg	R17247
Methylene chloride	SW8260B	9/8/2008	50	1	50	ND	µg/Kg	R17247
Naphthalene	SW8260B	9/8/2008	20	1	20	ND	µg/Kg	R17247
n-Butylbenzene	SW8260B	9/8/2008	10	1	10	ND	µg/Kg	R17247
n-Propylbenzene	SW8260B	9/8/2008	10	1	10	ND	µg/Kg	R17247
sec-Butylbenzene	SW8260B	9/8/2008	10	1	10	ND	µg/Kg	R17247
Styrene	SW8260B	9/8/2008	10	1	10	ND	µg/Kg	R17247
t-Butyl alcohol (t-Butanol)	SW8260B	9/8/2008	50	1	50	ND	µg/Kg	R17247
tert-Amyl methyl ether (TAME)	SW8260B	9/8/2008	10	1	10	ND	µg/Kg	R17247
tert-Butylbenzene	SW8260B	9/8/2008	10	1	10	ND	µg/Kg	R17247
Tetrachloroethene	SW8260B	9/8/2008	10	1	10	ND	µg/Kg	R17247
Toluene	SW8260B	9/8/2008	10	1	10	ND	µg/Kg	R17247
trans-1,2-Dichloroethene	SW8260B	9/8/2008	10	1	10	ND	µg/Kg	R17247
trans-1,3-Dichloropropene	SW8260B	9/8/2008	10	1	10	ND	µg/Kg	R17247
Trichloroethene	SW8260B	9/8/2008	10	1	10	ND	µg/Kg	R17247
Trichlorofluoromethane	SW8260B	9/8/2008	10	1	10	ND	µg/Kg	R17247
Vinyl chloride	SW8260B	9/8/2008	10	1	10	ND	µg/Kg	R17247
Xylenes, Total	SW8260B	9/8/2008	15	1	15	ND	µg/Kg	R17247
Surr: 4-Bromofluorobenzene	SW8260B	9/8/2008	0	1	55.8-141	93.7	%REC	R17247
Surr: Dibromofluoromethane	SW8260B	9/8/2008	0	1	59.8-148	123	%REC	R17247
Surr: Toluene-d8	SW8260B	9/8/2008	0	1	55.2-133	87.8	%REC	R17247
Total Organic Carbon	SW9060	9/5/2008	25	1	25	ND	mg/Kg	R17242

These analyses were performed according to State of California Environmental Laboratory Accreditation program, Certificate # 1991

Report prepared for: Charlie Almestad
KLEINFELDER

Date Received: 9/3/2008
Date Reported: 9/10/2008

Client Sample ID: DP-2-13
Sample Location: CTO
Sample Matrix: SOIL
Date/Time Sampled 9/2/2008 10:35:00 AM

Lab Sample ID: 0809003-003
Date Prepared: 9/8/2008

Parameters	Analysis Method	Date Analyzed	RL	Dilution Factor	MRL	Result	Units	Analytical Batch
TPH (Diesel-SG)	SW8015B	9/8/2008	2	1	2.00	ND	mg/Kg	R17229
Surr: Pentacosane	SW8015B	9/8/2008	0	1	61.5-133	80.7	%REC	R17229
TPH (Gasoline)	SW8015B	9/8/2008	0.1	1	0.100	ND	mg/Kg	R17253
Surr: Trifluorotoluene	SW8015B	9/8/2008	0	1	65-135	95.4	%REC	R17253

These analyses were performed according to State of California Environmental Laboratory Accreditation program, Certificate # 1991

Report prepared for: Charlie Almestad
KLEINFELDER

Date Received: 9/3/2008
Date Reported: 9/10/2008

Client Sample ID: DP-2-13
Sample Location: CTO
Sample Matrix: SOIL
Date/Time Sampled 9/2/2008 10:35:00 AM

Lab Sample ID: 0809003-003
Date Prepared: 9/8/2008

Parameters	Analysis Method	Date Analyzed	RL	Dilution Factor	MRL	Result	Units	Analytical Batch
1,1,1,2-Tetrachloroethane	SW8260B	9/8/2008	10	1	10	ND	µg/Kg	R17247
1,1,1-Trichloroethane	SW8260B	9/8/2008	10	1	10	ND	µg/Kg	R17247
1,1,2,2-Tetrachloroethane	SW8260B	9/8/2008	10	1	10	ND	µg/Kg	R17247
1,1,2-Trichloroethane	SW8260B	9/8/2008	10	1	10	ND	µg/Kg	R17247
1,1-Dichloroethane	SW8260B	9/8/2008	10	1	10	ND	µg/Kg	R17247
1,1-Dichloroethene	SW8260B	9/8/2008	10	1	10	ND	µg/Kg	R17247
1,1-Dichloropropene	SW8260B	9/8/2008	10	1	10	ND	µg/Kg	R17247
1,2,3-Trichlorobenzene	SW8260B	9/8/2008	10	1	10	ND	µg/Kg	R17247
1,2,3-Trichloropropane	SW8260B	9/8/2008	10	1	10	ND	µg/Kg	R17247
1,2,4-Trichlorobenzene	SW8260B	9/8/2008	10	1	10	ND	µg/Kg	R17247
1,2,4-Trimethylbenzene	SW8260B	9/8/2008	10	1	10	ND	µg/Kg	R17247
1,2-Dibromo-3-chloropropane	SW8260B	9/8/2008	10	1	10	ND	µg/Kg	R17247
1,2-Dibromoethane (EDB)	SW8260B	9/8/2008	10	1	10	ND	µg/Kg	R17247
1,2-Dichlorobenzene	SW8260B	9/8/2008	10	1	10	ND	µg/Kg	R17247
1,2-Dichloroethane (EDC)	SW8260B	9/8/2008	10	1	10	ND	µg/Kg	R17247
1,2-Dichloropropane	SW8260B	9/8/2008	10	1	10	ND	µg/Kg	R17247
1,3,5-Trimethylbenzene	SW8260B	9/8/2008	10	1	10	ND	µg/Kg	R17247
1,3-Dichlorobenzene	SW8260B	9/8/2008	10	1	10	ND	µg/Kg	R17247
1,4-Dichlorobenzene	SW8260B	9/8/2008	10	1	10	ND	µg/Kg	R17247
2,2-Dichloropropane	SW8260B	9/8/2008	10	1	10	ND	µg/Kg	R17247
2-Chloroethyl vinyl ether	SW8260B	9/8/2008	10	1	10	ND	µg/Kg	R17247
2-Chlorotoluene	SW8260B	9/8/2008	10	1	10	ND	µg/Kg	R17247
4-Chlorotoluene	SW8260B	9/8/2008	10	1	10	ND	µg/Kg	R17247
4-Isopropyltoluene	SW8260B	9/8/2008	10	1	10	ND	µg/Kg	R17247
Benzene	SW8260B	9/8/2008	10	1	10	ND	µg/Kg	R17247
Bromobenzene	SW8260B	9/8/2008	10	1	10	ND	µg/Kg	R17247
Bromochloromethane	SW8260B	9/8/2008	10	1	10	ND	µg/Kg	R17247
Bromodichloromethane	SW8260B	9/8/2008	10	1	10	ND	µg/Kg	R17247
Bromoform	SW8260B	9/8/2008	10	1	10	ND	µg/Kg	R17247
Bromomethane	SW8260B	9/8/2008	10	1	10	ND	µg/Kg	R17247
Carbon tetrachloride	SW8260B	9/8/2008	10	1	10	ND	µg/Kg	R17247
Chlorobenzene	SW8260B	9/8/2008	10	1	10	ND	µg/Kg	R17247
Chloroform	SW8260B	9/8/2008	10	1	10	ND	µg/Kg	R17247
Chloromethane	SW8260B	9/8/2008	10	1	10	ND	µg/Kg	R17247
cis-1,2-Dichloroethene	SW8260B	9/8/2008	10	1	10	ND	µg/Kg	R17247
cis-1,3-Dichloropropene	SW8260B	9/8/2008	10	1	10	ND	µg/Kg	R17247
Dibromochloromethane	SW8260B	9/8/2008	10	1	10	ND	µg/Kg	R17247
Dibromomethane	SW8260B	9/8/2008	10	1	10	ND	µg/Kg	R17247
Dichlorodifluoromethane	SW8260B	9/8/2008	10	1	10	ND	µg/Kg	R17247
Ethyl tert-butyl ether (ETBE)	SW8260B	9/8/2008	10	1	10	ND	µg/Kg	R17247
Ethylbenzene	SW8260B	9/8/2008	10	1	10	ND	µg/Kg	R17247
Freon-113	SW8260B	9/8/2008	10	1	10	ND	µg/Kg	R17247
Hexachlorobutadiene	SW8260B	9/8/2008	10	1	10	ND	µg/Kg	R17247

These analyses were performed according to State of California Environmental Laboratory Accreditation program, Certificate # 1991

Report prepared for: Charlie Almestad
KLEINFELDER

Date Received: 9/3/2008
Date Reported: 9/10/2008

Client Sample ID: DP-2-13
Sample Location: CTO
Sample Matrix: SOIL
Date/Time Sampled 9/2/2008 10:35:00 AM

Lab Sample ID: 0809003-003
Date Prepared: 9/8/2008

Parameters	Analysis Method	Date Analyzed	RL	Dilution Factor	MRL	Result	Units	Analytical Batch
Isopropyl Ether	SW8260B	9/8/2008	10	1	10	ND	µg/Kg	R17247
Isopropylbenzene	SW8260B	9/8/2008	10	1	10	ND	µg/Kg	R17247
Methyl tert-butyl ether (MTBE)	SW8260B	9/8/2008	10	1	10	ND	µg/Kg	R17247
Methylene chloride	SW8260B	9/8/2008	50	1	50	ND	µg/Kg	R17247
Naphthalene	SW8260B	9/8/2008	20	1	20	ND	µg/Kg	R17247
n-Butylbenzene	SW8260B	9/8/2008	10	1	10	ND	µg/Kg	R17247
n-Propylbenzene	SW8260B	9/8/2008	10	1	10	ND	µg/Kg	R17247
sec-Butylbenzene	SW8260B	9/8/2008	10	1	10	ND	µg/Kg	R17247
Styrene	SW8260B	9/8/2008	10	1	10	ND	µg/Kg	R17247
t-Butyl alcohol (t-Butanol)	SW8260B	9/8/2008	50	1	50	ND	µg/Kg	R17247
tert-Amyl methyl ether (TAME)	SW8260B	9/8/2008	10	1	10	ND	µg/Kg	R17247
tert-Butylbenzene	SW8260B	9/8/2008	10	1	10	ND	µg/Kg	R17247
Tetrachloroethene	SW8260B	9/8/2008	10	1	10	ND	µg/Kg	R17247
Toluene	SW8260B	9/8/2008	10	1	10	ND	µg/Kg	R17247
trans-1,2-Dichloroethene	SW8260B	9/8/2008	10	1	10	ND	µg/Kg	R17247
trans-1,3-Dichloropropene	SW8260B	9/8/2008	10	1	10	ND	µg/Kg	R17247
Trichloroethene	SW8260B	9/8/2008	10	1	10	ND	µg/Kg	R17247
Trichlorofluoromethane	SW8260B	9/8/2008	10	1	10	ND	µg/Kg	R17247
Vinyl chloride	SW8260B	9/8/2008	10	1	10	ND	µg/Kg	R17247
Xylenes, Total	SW8260B	9/8/2008	15	1	15	ND	µg/Kg	R17247
Surr: 4-Bromofluorobenzene	SW8260B	9/8/2008	0	1	55.8-141	95.0	%REC	R17247
Surr: Dibromofluoromethane	SW8260B	9/8/2008	0	1	59.8-148	131	%REC	R17247
Surr: Toluene-d8	SW8260B	9/8/2008	0	1	55.2-133	85.6	%REC	R17247
Total Organic Carbon	SW9060	9/5/2008	25	1	25	ND	mg/Kg	R17242

These analyses were performed according to State of California Environmental Laboratory Accreditation program, Certificate # 1991

Report prepared for: Charlie Almestad
KLEINFELDER

Date Received: 9/3/2008
Date Reported: 9/10/2008

Client Sample ID: DP-1-14
Sample Location: CTO
Sample Matrix: SOIL
Date/Time Sampled 9/2/2008 11:55:00 AM

Lab Sample ID: 0809003-004
Date Prepared: 9/8/2008

Parameters	Analysis Method	Date Analyzed	RL	Dilution Factor	MRL	Result	Units	Analytical Batch
TPH (Diesel-SG)	SW8015B	9/8/2008	2	1	2.00	ND	mg/Kg	R17229
Surr: Pentacosane	SW8015B	9/8/2008	0	1	61.5-133	82.9	%REC	R17229
TPH (Gasoline)	SW8015B	9/8/2008	0.1	1	0.100	ND	mg/Kg	R17253
Surr: Trifluorotoluene	SW8015B	9/8/2008	0	1	65-135	99.1	%REC	R17253

These analyses were performed according to State of California Environmental Laboratory Accreditation program, Certificate # 1991

Report prepared for: Charlie Almestad
KLEINFELDER

Date Received: 9/3/2008
Date Reported: 9/10/2008

Client Sample ID: DP-1-14
Sample Location: CTO
Sample Matrix: SOIL
Date/Time Sampled 9/2/2008 11:55:00 AM

Lab Sample ID: 0809003-004
Date Prepared: 9/8/2008

Parameters	Analysis Method	Date Analyzed	RL	Dilution Factor	MRL	Result	Units	Analytical Batch
1,1,1,2-Tetrachloroethane	SW8260B	9/8/2008	10	1	10	ND	µg/Kg	R17247
1,1,1-Trichloroethane	SW8260B	9/8/2008	10	1	10	ND	µg/Kg	R17247
1,1,2,2-Tetrachloroethane	SW8260B	9/8/2008	10	1	10	ND	µg/Kg	R17247
1,1,2-Trichloroethane	SW8260B	9/8/2008	10	1	10	ND	µg/Kg	R17247
1,1-Dichloroethane	SW8260B	9/8/2008	10	1	10	ND	µg/Kg	R17247
1,1-Dichloroethene	SW8260B	9/8/2008	10	1	10	ND	µg/Kg	R17247
1,1-Dichloropropene	SW8260B	9/8/2008	10	1	10	ND	µg/Kg	R17247
1,2,3-Trichlorobenzene	SW8260B	9/8/2008	10	1	10	ND	µg/Kg	R17247
1,2,3-Trichloropropane	SW8260B	9/8/2008	10	1	10	ND	µg/Kg	R17247
1,2,4-Trichlorobenzene	SW8260B	9/8/2008	10	1	10	ND	µg/Kg	R17247
1,2,4-Trimethylbenzene	SW8260B	9/8/2008	10	1	10	ND	µg/Kg	R17247
1,2-Dibromo-3-chloropropane	SW8260B	9/8/2008	10	1	10	ND	µg/Kg	R17247
1,2-Dibromoethane (EDB)	SW8260B	9/8/2008	10	1	10	ND	µg/Kg	R17247
1,2-Dichlorobenzene	SW8260B	9/8/2008	10	1	10	ND	µg/Kg	R17247
1,2-Dichloroethane (EDC)	SW8260B	9/8/2008	10	1	10	ND	µg/Kg	R17247
1,2-Dichloropropane	SW8260B	9/8/2008	10	1	10	ND	µg/Kg	R17247
1,3,5-Trimethylbenzene	SW8260B	9/8/2008	10	1	10	ND	µg/Kg	R17247
1,3-Dichlorobenzene	SW8260B	9/8/2008	10	1	10	ND	µg/Kg	R17247
1,4-Dichlorobenzene	SW8260B	9/8/2008	10	1	10	ND	µg/Kg	R17247
2,2-Dichloropropane	SW8260B	9/8/2008	10	1	10	ND	µg/Kg	R17247
2-Chloroethyl vinyl ether	SW8260B	9/8/2008	10	1	10	ND	µg/Kg	R17247
2-Chlorotoluene	SW8260B	9/8/2008	10	1	10	ND	µg/Kg	R17247
4-Chlorotoluene	SW8260B	9/8/2008	10	1	10	ND	µg/Kg	R17247
4-Isopropyltoluene	SW8260B	9/8/2008	10	1	10	ND	µg/Kg	R17247
Benzene	SW8260B	9/8/2008	10	1	10	ND	µg/Kg	R17247
Bromobenzene	SW8260B	9/8/2008	10	1	10	ND	µg/Kg	R17247
Bromochloromethane	SW8260B	9/8/2008	10	1	10	ND	µg/Kg	R17247
Bromodichloromethane	SW8260B	9/8/2008	10	1	10	ND	µg/Kg	R17247
Bromoform	SW8260B	9/8/2008	10	1	10	ND	µg/Kg	R17247
Bromomethane	SW8260B	9/8/2008	10	1	10	ND	µg/Kg	R17247
Carbon tetrachloride	SW8260B	9/8/2008	10	1	10	ND	µg/Kg	R17247
Chlorobenzene	SW8260B	9/8/2008	10	1	10	ND	µg/Kg	R17247
Chloroform	SW8260B	9/8/2008	10	1	10	ND	µg/Kg	R17247
Chloromethane	SW8260B	9/8/2008	10	1	10	ND	µg/Kg	R17247
cis-1,2-Dichloroethene	SW8260B	9/8/2008	10	1	10	ND	µg/Kg	R17247
cis-1,3-Dichloropropene	SW8260B	9/8/2008	10	1	10	ND	µg/Kg	R17247
Dibromochloromethane	SW8260B	9/8/2008	10	1	10	ND	µg/Kg	R17247
Dibromomethane	SW8260B	9/8/2008	10	1	10	ND	µg/Kg	R17247
Dichlorodifluoromethane	SW8260B	9/8/2008	10	1	10	ND	µg/Kg	R17247
Ethyl tert-butyl ether (ETBE)	SW8260B	9/8/2008	10	1	10	ND	µg/Kg	R17247
Ethylbenzene	SW8260B	9/8/2008	10	1	10	ND	µg/Kg	R17247
Freon-113	SW8260B	9/8/2008	10	1	10	ND	µg/Kg	R17247
Hexachlorobutadiene	SW8260B	9/8/2008	10	1	10	ND	µg/Kg	R17247

These analyses were performed according to State of California Environmental Laboratory Accreditation program, Certificate # 1991

Report prepared for: Charlie Almestad
KLEINFELDER

Date Received: 9/3/2008
Date Reported: 9/10/2008

Client Sample ID: DP-1-14
Sample Location: CTO
Sample Matrix: SOIL
Date/Time Sampled 9/2/2008 11:55:00 AM

Lab Sample ID: 0809003-004
Date Prepared: 9/8/2008

Parameters	Analysis Method	Date Analyzed	RL	Dilution Factor	MRL	Result	Units	Analytical Batch
Isopropyl Ether	SW8260B	9/8/2008	10	1	10	ND	µg/Kg	R17247
Isopropylbenzene	SW8260B	9/8/2008	10	1	10	ND	µg/Kg	R17247
Methyl tert-butyl ether (MTBE)	SW8260B	9/8/2008	10	1	10	ND	µg/Kg	R17247
Methylene chloride	SW8260B	9/8/2008	50	1	50	ND	µg/Kg	R17247
Naphthalene	SW8260B	9/8/2008	20	1	20	ND	µg/Kg	R17247
n-Butylbenzene	SW8260B	9/8/2008	10	1	10	ND	µg/Kg	R17247
n-Propylbenzene	SW8260B	9/8/2008	10	1	10	ND	µg/Kg	R17247
sec-Butylbenzene	SW8260B	9/8/2008	10	1	10	ND	µg/Kg	R17247
Styrene	SW8260B	9/8/2008	10	1	10	ND	µg/Kg	R17247
t-Butyl alcohol (t-Butanol)	SW8260B	9/8/2008	50	1	50	ND	µg/Kg	R17247
tert-Amyl methyl ether (TAME)	SW8260B	9/8/2008	10	1	10	ND	µg/Kg	R17247
tert-Butylbenzene	SW8260B	9/8/2008	10	1	10	ND	µg/Kg	R17247
Tetrachloroethene	SW8260B	9/8/2008	10	1	10	ND	µg/Kg	R17247
Toluene	SW8260B	9/8/2008	10	1	10	ND	µg/Kg	R17247
trans-1,2-Dichloroethene	SW8260B	9/8/2008	10	1	10	ND	µg/Kg	R17247
trans-1,3-Dichloropropene	SW8260B	9/8/2008	10	1	10	ND	µg/Kg	R17247
Trichloroethene	SW8260B	9/8/2008	10	1	10	ND	µg/Kg	R17247
Trichlorofluoromethane	SW8260B	9/8/2008	10	1	10	ND	µg/Kg	R17247
Vinyl chloride	SW8260B	9/8/2008	10	1	10	ND	µg/Kg	R17247
Xylenes, Total	SW8260B	9/8/2008	15	1	15	ND	µg/Kg	R17247
Surr: 4-Bromofluorobenzene	SW8260B	9/8/2008	0	1	55.8-141	93.3	%REC	R17247
Surr: Dibromofluoromethane	SW8260B	9/8/2008	0	1	59.8-148	128	%REC	R17247
Surr: Toluene-d8	SW8260B	9/8/2008	0	1	55.2-133	86.6	%REC	R17247
Total Organic Carbon	SW9060	9/5/2008	25	1	25	ND	mg/Kg	R17242

These analyses were performed according to State of California Environmental Laboratory Accreditation program, Certificate # 1991

Report prepared for: Charlie Almestad
KLEINFELDER

Date Received: 9/3/2008
Date Reported: 9/10/2008

Client Sample ID: DP-4-W
Sample Location: CTO
Sample Matrix: WATER
Date/Time Sampled 9/2/2008 9:46:00 AM

Lab Sample ID: 0809003-005
Date Prepared: 9/4/2008

Parameters	Analysis Method	Date Analyzed	RL	Dilution Factor	MRL	Result	Units	Analytical Batch
TPH (Diesel)	SW8015B	9/8/2008	0.1	1	0.114	ND	mg/L	R17231
Surr: Pentacosane	SW8015B	9/8/2008	0	1	57.9-125	91.0	%REC	R17231

Note: Reporting limits increased due to limited sample volume available (sediment present).

TPH (Gasoline)	SW8015B	9/9/2008	0.05	1.26	0.0630	ND	mg/L	R17258
Surr: Trifluorotoluene	SW8015B	9/9/2008	0	1.26	65-135	95.6	%REC	R17258

Note: Sample was diluted prior to analysis due to sediment in all voas.

These analyses were performed according to State of California Environmental Laboratory Accreditation program, Certificate # 1991

Report prepared for: Charlie Almestad
KLEINFELDER

Date Received: 9/3/2008
Date Reported: 9/10/2008

Client Sample ID: DP-4-W
Sample Location: CTO
Sample Matrix: WATER
Date/Time Sampled 9/2/2008 9:46:00 AM

Lab Sample ID: 0809003-005
Date Prepared: 9/4/2008

Parameters	Analysis Method	Date Analyzed	RL	Dilution Factor	MRL	Result	Units	Analytical Batch
1,1,1,2-Tetrachloroethane	SW8260B	9/4/2008	1	1.16	1.16	ND	µg/L	R17240
1,1,1-Trichloroethane	SW8260B	9/4/2008	0.5	1.16	0.58	ND	µg/L	R17240
1,1,2,2-Tetrachloroethane	SW8260B	9/4/2008	1	1.16	1.16	ND	µg/L	R17240
1,1,2-Trichloroethane	SW8260B	9/4/2008	0.5	1.16	0.58	ND	µg/L	R17240
1,1-Dichloroethane	SW8260B	9/4/2008	0.5	1.16	0.58	ND	µg/L	R17240
1,1-Dichloroethene	SW8260B	9/4/2008	1	1.16	1.16	ND	µg/L	R17240
1,1-Dichloropropene	SW8260B	9/4/2008	0.5	1.16	0.58	ND	µg/L	R17240
1,2,3-Trichlorobenzene	SW8260B	9/4/2008	6	1.16	6.96	ND	µg/L	R17240
1,2,3-Trichloropropane	SW8260B	9/4/2008	1	1.16	1.16	ND	µg/L	R17240
1,2,4-Trichlorobenzene	SW8260B	9/4/2008	6	1.16	6.96	ND	µg/L	R17240
1,2,4-Trimethylbenzene	SW8260B	9/4/2008	0.5	1.16	0.58	ND	µg/L	R17240
1,2-Dibromo-3-chloropropane	SW8260B	9/4/2008	0.5	1.16	0.58	ND	µg/L	R17240
1,2-Dibromoethane (EDB)	SW8260B	9/4/2008	0.5	1.16	0.58	ND	µg/L	R17240
1,2-Dichlorobenzene	SW8260B	9/4/2008	0.5	1.16	0.58	ND	µg/L	R17240
1,2-Dichloroethane (EDC)	SW8260B	9/4/2008	0.5	1.16	0.58	ND	µg/L	R17240
1,2-Dichloropropane	SW8260B	9/4/2008	6	1.16	6.96	ND	µg/L	R17240
1,3,5-Trimethylbenzene	SW8260B	9/4/2008	0.5	1.16	0.58	ND	µg/L	R17240
1,3-Dichlorobenzene	SW8260B	9/4/2008	0.5	1.16	0.58	ND	µg/L	R17240
1,3-Dichloropropene	SW8260B	9/4/2008	0.5	1.16	0.58	ND	µg/L	R17240
1,4-Dichlorobenzene	SW8260B	9/4/2008	0.5	1.16	0.58	ND	µg/L	R17240
2,2-Dichloropropane	SW8260B	9/4/2008	0.5	1.16	0.58	ND	µg/L	R17240
2-Chloroethyl vinyl ether	SW8260B	9/4/2008	1	1.16	1.16	ND	µg/L	R17240
2-Chlorotoluene	SW8260B	9/4/2008	0.5	1.16	0.58	ND	µg/L	R17240
4-Chlorotoluene	SW8260B	9/4/2008	0.5	1.16	0.58	ND	µg/L	R17240
4-Isopropyltoluene	SW8260B	9/4/2008	0.5	1.16	0.58	ND	µg/L	R17240
Acetone	SW8260B	9/4/2008	10	1.16	11.6	ND	µg/L	R17240
Benzene	SW8260B	9/4/2008	0.5	1.16	0.58	ND	µg/L	R17240
Bromobenzene	SW8260B	9/4/2008	0.5	1.16	0.58	ND	µg/L	R17240
Bromochloromethane	SW8260B	9/4/2008	0.5	1.16	0.58	ND	µg/L	R17240
Bromodichloromethane	SW8260B	9/4/2008	0.5	1.16	0.58	ND	µg/L	R17240
Bromoform	SW8260B	9/4/2008	1	1.16	1.16	ND	µg/L	R17240
Bromomethane	SW8260B	9/4/2008	6	1.16	6.96	ND	µg/L	R17240
Carbon tetrachloride	SW8260B	9/4/2008	1	1.16	1.16	ND	µg/L	R17240
Chlorobenzene	SW8260B	9/4/2008	0.5	1.16	0.58	ND	µg/L	R17240
Chloroform	SW8260B	9/4/2008	0.5	1.16	0.58	ND	µg/L	R17240
Chloromethane	SW8260B	9/4/2008	0.5	1.16	0.58	ND	µg/L	R17240
cis-1,2-Dichloroethene	SW8260B	9/4/2008	0.5	1.16	0.58	ND	µg/L	R17240
cis-1,3-Dichloropropene	SW8260B	9/4/2008	0.5	1.16	0.58	ND	µg/L	R17240
Dibromochloromethane	SW8260B	9/4/2008	0.5	1.16	0.58	ND	µg/L	R17240
Dibromomethane	SW8260B	9/4/2008	0.5	1.16	0.58	ND	µg/L	R17240
Dichlorodifluoromethane	SW8260B	9/4/2008	0.5	1.16	0.58	ND	µg/L	R17240
Diisopropyl ether (DIPE)	SW8260B	9/4/2008	0.5	1.16	0.58	ND	µg/L	R17240
Ethyl tert-butyl ether (ETBE)	SW8260B	9/4/2008	0.5	1.16	0.58	ND	µg/L	R17240

These analyses were performed according to State of California Environmental Laboratory Accreditation program, Certificate # 1991

Report prepared for: Charlie Almestad
KLEINFELDER

Date Received: 9/3/2008
Date Reported: 9/10/2008

Client Sample ID: DP-4-W
Sample Location: CTO
Sample Matrix: WATER
Date/Time Sampled 9/2/2008 9:46:00 AM

Lab Sample ID: 0809003-005
Date Prepared: 9/4/2008

Parameters	Analysis Method	Date Analyzed	RL	Dilution Factor	MRL	Result	Units	Analytical Batch
Ethylbenzene	SW8260B	9/4/2008	0.5	1.16	0.58	ND	µg/L	R17240
Freon-113	SW8260B	9/4/2008	1	1.16	1.16	ND	µg/L	R17240
Hexachlorobutadiene	SW8260B	9/4/2008	0.5	1.16	0.58	ND	µg/L	R17240
Isopropylbenzene	SW8260B	9/4/2008	1	1.16	1.16	ND	µg/L	R17240
Methyl tert-butyl ether (MTBE)	SW8260B	9/4/2008	0.5	1.16	0.58	ND	µg/L	R17240
Methylene chloride	SW8260B	9/4/2008	5	1.16	5.80	ND	µg/L	R17240
Naphthalene	SW8260B	9/4/2008	6	1.16	6.96	ND	µg/L	R17240
n-Butylbenzene	SW8260B	9/4/2008	0.5	1.16	0.58	ND	µg/L	R17240
n-Propylbenzene	SW8260B	9/4/2008	0.5	1.16	0.58	ND	µg/L	R17240
sec-Butylbenzene	SW8260B	9/4/2008	0.5	1.16	0.58	ND	µg/L	R17240
Styrene	SW8260B	9/4/2008	0.5	1.16	0.58	ND	µg/L	R17240
t-Butyl alcohol (t-Butanol)	SW8260B	9/4/2008	5	1.16	5.80	ND	µg/L	R17240
tert-Amyl methyl ether (TAME)	SW8260B	9/4/2008	0.5	1.16	0.58	ND	µg/L	R17240
tert-Butylbenzene	SW8260B	9/4/2008	0.5	1.16	0.58	ND	µg/L	R17240
Tetrachloroethene	SW8260B	9/4/2008	0.5	1.16	0.58	ND	µg/L	R17240
Toluene	SW8260B	9/4/2008	0.5	1.16	0.58	ND	µg/L	R17240
trans-1,2-Dichloroethene	SW8260B	9/4/2008	0.5	1.16	0.58	ND	µg/L	R17240
trans-1,3-Dichloropropene	SW8260B	9/4/2008	0.5	1.16	0.58	ND	µg/L	R17240
Trichloroethene	SW8260B	9/4/2008	0.5	1.16	0.58	ND	µg/L	R17240
Trichlorofluoromethane	SW8260B	9/4/2008	0.5	1.16	0.58	ND	µg/L	R17240
Vinyl chloride	SW8260B	9/4/2008	0.5	1.16	0.58	ND	µg/L	R17240
Xylenes, Total	SW8260B	9/4/2008	1.5	1.16	1.74	ND	µg/L	R17240
Surr: Dibromofluoromethane	SW8260B	9/4/2008	0	1.16	61.2-131	116	%REC	R17240
Surr: 4-Bromofluorobenzene	SW8260B	9/4/2008	0	1.16	64.1-120	112	%REC	R17240
Surr: Toluene-d8	SW8260B	9/4/2008	0	1.16	75.1-127	115	%REC	R17240

Note: Sample was diluted prior to analysis due to sediment in all voas.

These analyses were performed according to State of California Environmental Laboratory Accreditation program, Certificate # 1991

Report prepared for: Charlie Almestad
KLEINFELDER

Date Received: 9/3/2008
Date Reported: 9/10/2008

Client Sample ID: DP-3-W
Sample Location: CTO
Sample Matrix: WATER
Date/Time Sampled 9/2/2008 9:00:00 AM

Lab Sample ID: 0809003-006
Date Prepared: 9/4/2008

Parameters	Analysis Method	Date Analyzed	RL	Dilution Factor	MRL	Result	Units	Analytical Batch
TPH (Diesel)	SW8015B	9/8/2008	0.1	1	0.123	ND	mg/L	R17231
Surr: Pentacosane	SW8015B	9/8/2008	0	1	57.9-125	104	%REC	R17231

Note: Reporting limits increased due to limited sample volume available (sediment present).

TPH (Gasoline)	SW8015B	9/9/2008	0.05	1.19	0.0595	ND	mg/L	R17258
Surr: Trifluorotoluene	SW8015B	9/9/2008	0	1.19	65-135	98.6	%REC	R17258

Note: Sample was diluted prior to analysis due to sediment in all voas.

These analyses were performed according to State of California Environmental Laboratory Accreditation program, Certificate # 1991

Report prepared for: Charlie Almestad
KLEINFELDER

Date Received: 9/3/2008
Date Reported: 9/10/2008

Client Sample ID: DP-3-W
Sample Location: CTO
Sample Matrix: WATER
Date/Time Sampled 9/2/2008 9:00:00 AM

Lab Sample ID: 0809003-006
Date Prepared: 9/4/2008

Parameters	Analysis Method	Date Analyzed	RL	Dilution Factor	MRL	Result	Units	Analytical Batch
1,1,1,2-Tetrachloroethane	SW8260B	9/4/2008	1	1	1.00	ND	µg/L	R17240
1,1,1-Trichloroethane	SW8260B	9/4/2008	0.5	1	0.50	ND	µg/L	R17240
1,1,2,2-Tetrachloroethane	SW8260B	9/4/2008	1	1	1.00	ND	µg/L	R17240
1,1,2-Trichloroethane	SW8260B	9/4/2008	0.5	1	0.50	ND	µg/L	R17240
1,1-Dichloroethane	SW8260B	9/4/2008	0.5	1	0.50	ND	µg/L	R17240
1,1-Dichloroethene	SW8260B	9/4/2008	1	1	1.00	ND	µg/L	R17240
1,1-Dichloropropene	SW8260B	9/4/2008	0.5	1	0.50	ND	µg/L	R17240
1,2,3-Trichlorobenzene	SW8260B	9/4/2008	6	1	6.00	ND	µg/L	R17240
1,2,3-Trichloropropane	SW8260B	9/4/2008	1	1	1.00	ND	µg/L	R17240
1,2,4-Trichlorobenzene	SW8260B	9/4/2008	6	1	6.00	ND	µg/L	R17240
1,2,4-Trimethylbenzene	SW8260B	9/4/2008	0.5	1	0.50	ND	µg/L	R17240
1,2-Dibromo-3-chloropropane	SW8260B	9/4/2008	0.5	1	0.50	ND	µg/L	R17240
1,2-Dibromoethane (EDB)	SW8260B	9/4/2008	0.5	1	0.50	ND	µg/L	R17240
1,2-Dichlorobenzene	SW8260B	9/4/2008	0.5	1	0.50	ND	µg/L	R17240
1,2-Dichloroethane (EDC)	SW8260B	9/4/2008	0.5	1	0.50	ND	µg/L	R17240
1,2-Dichloropropane	SW8260B	9/4/2008	6	1	6.00	ND	µg/L	R17240
1,3,5-Trimethylbenzene	SW8260B	9/4/2008	0.5	1	0.50	ND	µg/L	R17240
1,3-Dichlorobenzene	SW8260B	9/4/2008	0.5	1	0.50	ND	µg/L	R17240
1,3-Dichloropropene	SW8260B	9/4/2008	0.5	1	0.50	ND	µg/L	R17240
1,4-Dichlorobenzene	SW8260B	9/4/2008	0.5	1	0.50	ND	µg/L	R17240
2,2-Dichloropropane	SW8260B	9/4/2008	0.5	1	0.50	ND	µg/L	R17240
2-Chloroethyl vinyl ether	SW8260B	9/4/2008	1	1	1.00	ND	µg/L	R17240
2-Chlorotoluene	SW8260B	9/4/2008	0.5	1	0.50	ND	µg/L	R17240
4-Chlorotoluene	SW8260B	9/4/2008	0.5	1	0.50	ND	µg/L	R17240
4-Isopropyltoluene	SW8260B	9/4/2008	0.5	1	0.50	ND	µg/L	R17240
Acetone	SW8260B	9/4/2008	10	1	10.0	ND	µg/L	R17240
Benzene	SW8260B	9/4/2008	0.5	1	0.50	ND	µg/L	R17240
Bromobenzene	SW8260B	9/4/2008	0.5	1	0.50	ND	µg/L	R17240
Bromochloromethane	SW8260B	9/4/2008	0.5	1	0.50	ND	µg/L	R17240
Bromodichloromethane	SW8260B	9/4/2008	0.5	1	0.50	ND	µg/L	R17240
Bromoform	SW8260B	9/4/2008	1	1	1.00	ND	µg/L	R17240
Bromomethane	SW8260B	9/4/2008	6	1	6.00	ND	µg/L	R17240
Carbon tetrachloride	SW8260B	9/4/2008	1	1	1.00	ND	µg/L	R17240
Chlorobenzene	SW8260B	9/4/2008	0.5	1	0.50	ND	µg/L	R17240
Chloroform	SW8260B	9/4/2008	0.5	1	0.50	ND	µg/L	R17240
Chloromethane	SW8260B	9/4/2008	0.5	1	0.50	ND	µg/L	R17240
cis-1,2-Dichloroethene	SW8260B	9/4/2008	0.5	1	0.50	ND	µg/L	R17240
cis-1,3-Dichloropropene	SW8260B	9/4/2008	0.5	1	0.50	ND	µg/L	R17240
Dibromochloromethane	SW8260B	9/4/2008	0.5	1	0.50	ND	µg/L	R17240
Dibromomethane	SW8260B	9/4/2008	0.5	1	0.50	ND	µg/L	R17240
Dichlorodifluoromethane	SW8260B	9/4/2008	0.5	1	0.50	ND	µg/L	R17240
Diisopropyl ether (DIPE)	SW8260B	9/4/2008	0.5	1	0.50	ND	µg/L	R17240
Ethyl tert-butyl ether (ETBE)	SW8260B	9/4/2008	0.5	1	0.50	ND	µg/L	R17240

These analyses were performed according to State of California Environmental Laboratory Accreditation program, Certificate # 1991

Report prepared for: Charlie Almestad
KLEINFELDER

Date Received: 9/3/2008
Date Reported: 9/10/2008

Client Sample ID: DP-3-W
Sample Location: CTO
Sample Matrix: WATER
Date/Time Sampled 9/2/2008 9:00:00 AM

Lab Sample ID: 0809003-006
Date Prepared: 9/4/2008

Parameters	Analysis Method	Date Analyzed	RL	Dilution Factor	MRL	Result	Units	Analytical Batch
Ethylbenzene	SW8260B	9/4/2008	0.5	1	0.50	ND	µg/L	R17240
Freon-113	SW8260B	9/4/2008	1	1	1.00	ND	µg/L	R17240
Hexachlorobutadiene	SW8260B	9/4/2008	0.5	1	0.50	ND	µg/L	R17240
Isopropylbenzene	SW8260B	9/4/2008	1	1	1.00	ND	µg/L	R17240
Methyl tert-butyl ether (MTBE)	SW8260B	9/4/2008	0.5	1	0.50	ND	µg/L	R17240
Methylene chloride	SW8260B	9/4/2008	5	1	5.00	ND	µg/L	R17240
Naphthalene	SW8260B	9/4/2008	6	1	6.00	ND	µg/L	R17240
n-Butylbenzene	SW8260B	9/4/2008	0.5	1	0.50	ND	µg/L	R17240
n-Propylbenzene	SW8260B	9/4/2008	0.5	1	0.50	ND	µg/L	R17240
sec-Butylbenzene	SW8260B	9/4/2008	0.5	1	0.50	ND	µg/L	R17240
Styrene	SW8260B	9/4/2008	0.5	1	0.50	ND	µg/L	R17240
t-Butyl alcohol (t-Butanol)	SW8260B	9/4/2008	5	1	5.00	ND	µg/L	R17240
tert-Amyl methyl ether (TAME)	SW8260B	9/4/2008	0.5	1	0.50	ND	µg/L	R17240
tert-Butylbenzene	SW8260B	9/4/2008	0.5	1	0.50	ND	µg/L	R17240
Tetrachloroethene	SW8260B	9/4/2008	0.5	1	0.50	ND	µg/L	R17240
Toluene	SW8260B	9/4/2008	0.5	1	0.50	ND	µg/L	R17240
trans-1,2-Dichloroethene	SW8260B	9/4/2008	0.5	1	0.50	ND	µg/L	R17240
trans-1,3-Dichloropropene	SW8260B	9/4/2008	0.5	1	0.50	ND	µg/L	R17240
Trichloroethene	SW8260B	9/4/2008	0.5	1	0.50	ND	µg/L	R17240
Trichlorofluoromethane	SW8260B	9/4/2008	0.5	1	0.50	ND	µg/L	R17240
Vinyl chloride	SW8260B	9/4/2008	0.5	1	0.50	ND	µg/L	R17240
Xylenes, Total	SW8260B	9/4/2008	1.5	1	1.50	ND	µg/L	R17240
Surr: Dibromofluoromethane	SW8260B	9/4/2008	0	1	61.2-131	111	%REC	R17240
Surr: 4-Bromofluorobenzene	SW8260B	9/4/2008	0	1	64.1-120	115	%REC	R17240
Surr: Toluene-d8	SW8260B	9/4/2008	0	1	75.1-127	116	%REC	R17240

These analyses were performed according to State of California Environmental Laboratory Accreditation program, Certificate # 1991

Report prepared for: Charlie Almestad
KLEINFELDER

Date Received: 9/3/2008
Date Reported: 9/10/2008

Client Sample ID: DP-2-W
Sample Location: CTO
Sample Matrix: WATER
Date/Time Sampled 9/2/2008 12:20:00 PM

Lab Sample ID: 0809003-007
Date Prepared: 9/4/2008

Parameters	Analysis Method	Date Analyzed	RL	Dilution Factor	MRL	Result	Units	Analytical Batch
TPH (Diesel)	SW8015B	9/8/2008	0.1	1	0.126	ND	mg/L	R17231
Surr: Pentacosane	SW8015B	9/8/2008	0	1	57.9-125	96.0	%REC	R17231

Note: Reporting limits increased due to limited sample volume available (sediment present).

TPH (Gasoline)	SW8015B	9/9/2008	0.05	1.16	0.0580	ND	mg/L	R17258
Surr: Trifluorotoluene	SW8015B	9/9/2008	0	1.16	65-135	98.5	%REC	R17258

Note: Sample was diluted prior to analysis due to sediment in all voas.

These analyses were performed according to State of California Environmental Laboratory Accreditation program, Certificate # 1991

Report prepared for: Charlie Almestad
KLEINFELDER

Date Received: 9/3/2008
Date Reported: 9/10/2008

Client Sample ID: DP-2-W
Sample Location: CTO
Sample Matrix: WATER
Date/Time Sampled 9/2/2008 12:20:00 PM

Lab Sample ID: 0809003-007
Date Prepared: 9/4/2008

Parameters	Analysis Method	Date Analyzed	RL	Dilution Factor	MRL	Result	Units	Analytical Batch
1,1,1,2-Tetrachloroethane	SW8260B	9/4/2008	1	1.19	1.19	ND	µg/L	R17240
1,1,1-Trichloroethane	SW8260B	9/4/2008	0.5	1.19	0.60	ND	µg/L	R17240
1,1,2,2-Tetrachloroethane	SW8260B	9/4/2008	1	1.19	1.19	ND	µg/L	R17240
1,1,2-Trichloroethane	SW8260B	9/4/2008	0.5	1.19	0.60	ND	µg/L	R17240
1,1-Dichloroethane	SW8260B	9/4/2008	0.5	1.19	0.60	ND	µg/L	R17240
1,1-Dichloroethene	SW8260B	9/4/2008	1	1.19	1.19	ND	µg/L	R17240
1,1-Dichloropropene	SW8260B	9/4/2008	0.5	1.19	0.60	ND	µg/L	R17240
1,2,3-Trichlorobenzene	SW8260B	9/4/2008	6	1.19	7.14	ND	µg/L	R17240
1,2,3-Trichloropropane	SW8260B	9/4/2008	1	1.19	1.19	ND	µg/L	R17240
1,2,4-Trichlorobenzene	SW8260B	9/4/2008	6	1.19	7.14	ND	µg/L	R17240
1,2,4-Trimethylbenzene	SW8260B	9/4/2008	0.5	1.19	0.60	ND	µg/L	R17240
1,2-Dibromo-3-chloropropane	SW8260B	9/4/2008	0.5	1.19	0.60	ND	µg/L	R17240
1,2-Dibromoethane (EDB)	SW8260B	9/4/2008	0.5	1.19	0.60	ND	µg/L	R17240
1,2-Dichlorobenzene	SW8260B	9/4/2008	0.5	1.19	0.60	ND	µg/L	R17240
1,2-Dichloroethane (EDC)	SW8260B	9/4/2008	0.5	1.19	0.60	ND	µg/L	R17240
1,2-Dichloropropane	SW8260B	9/4/2008	6	1.19	7.14	ND	µg/L	R17240
1,3,5-Trimethylbenzene	SW8260B	9/4/2008	0.5	1.19	0.60	ND	µg/L	R17240
1,3-Dichlorobenzene	SW8260B	9/4/2008	0.5	1.19	0.60	ND	µg/L	R17240
1,3-Dichloropropene	SW8260B	9/4/2008	0.5	1.19	0.60	ND	µg/L	R17240
1,4-Dichlorobenzene	SW8260B	9/4/2008	0.5	1.19	0.60	ND	µg/L	R17240
2,2-Dichloropropane	SW8260B	9/4/2008	0.5	1.19	0.60	ND	µg/L	R17240
2-Chloroethyl vinyl ether	SW8260B	9/4/2008	1	1.19	1.19	ND	µg/L	R17240
2-Chlorotoluene	SW8260B	9/4/2008	0.5	1.19	0.60	ND	µg/L	R17240
4-Chlorotoluene	SW8260B	9/4/2008	0.5	1.19	0.60	ND	µg/L	R17240
4-Isopropyltoluene	SW8260B	9/4/2008	0.5	1.19	0.60	ND	µg/L	R17240
Acetone	SW8260B	9/4/2008	10	1.19	11.9	ND	µg/L	R17240
Benzene	SW8260B	9/4/2008	0.5	1.19	0.60	ND	µg/L	R17240
Bromobenzene	SW8260B	9/4/2008	0.5	1.19	0.60	ND	µg/L	R17240
Bromochloromethane	SW8260B	9/4/2008	0.5	1.19	0.60	ND	µg/L	R17240
Bromodichloromethane	SW8260B	9/4/2008	0.5	1.19	0.60	ND	µg/L	R17240
Bromoform	SW8260B	9/4/2008	1	1.19	1.19	ND	µg/L	R17240
Bromomethane	SW8260B	9/4/2008	6	1.19	7.14	ND	µg/L	R17240
Carbon tetrachloride	SW8260B	9/4/2008	1	1.19	1.19	ND	µg/L	R17240
Chlorobenzene	SW8260B	9/4/2008	0.5	1.19	0.60	ND	µg/L	R17240
Chloroform	SW8260B	9/4/2008	0.5	1.19	0.60	ND	µg/L	R17240
Chloromethane	SW8260B	9/4/2008	0.5	1.19	0.60	ND	µg/L	R17240
cis-1,2-Dichloroethene	SW8260B	9/4/2008	0.5	1.19	0.60	ND	µg/L	R17240
cis-1,3-Dichloropropene	SW8260B	9/4/2008	0.5	1.19	0.60	ND	µg/L	R17240
Dibromochloromethane	SW8260B	9/4/2008	0.5	1.19	0.60	ND	µg/L	R17240
Dibromomethane	SW8260B	9/4/2008	0.5	1.19	0.60	ND	µg/L	R17240
Dichlorodifluoromethane	SW8260B	9/4/2008	0.5	1.19	0.60	ND	µg/L	R17240
Diisopropyl ether (DIPE)	SW8260B	9/4/2008	0.5	1.19	0.60	ND	µg/L	R17240
Ethyl tert-butyl ether (ETBE)	SW8260B	9/4/2008	0.5	1.19	0.60	ND	µg/L	R17240

These analyses were performed according to State of California Environmental Laboratory Accreditation program, Certificate # 1991

Report prepared for: Charlie Almestad
KLEINFELDER

Date Received: 9/3/2008
Date Reported: 9/10/2008

Client Sample ID: DP-2-W
Sample Location: CTO
Sample Matrix: WATER
Date/Time Sampled 9/2/2008 12:20:00 PM

Lab Sample ID: 0809003-007
Date Prepared: 9/4/2008

Parameters	Analysis Method	Date Analyzed	RL	Dilution Factor	MRL	Result	Units	Analytical Batch
Ethylbenzene	SW8260B	9/4/2008	0.5	1.19	0.60	ND	µg/L	R17240
Freon-113	SW8260B	9/4/2008	1	1.19	1.19	ND	µg/L	R17240
Hexachlorobutadiene	SW8260B	9/4/2008	0.5	1.19	0.60	ND	µg/L	R17240
Isopropylbenzene	SW8260B	9/4/2008	1	1.19	1.19	ND	µg/L	R17240
Methyl tert-butyl ether (MTBE)	SW8260B	9/4/2008	0.5	1.19	0.60	ND	µg/L	R17240
Methylene chloride	SW8260B	9/4/2008	5	1.19	5.95	ND	µg/L	R17240
Naphthalene	SW8260B	9/4/2008	6	1.19	7.14	ND	µg/L	R17240
n-Butylbenzene	SW8260B	9/4/2008	0.5	1.19	0.60	ND	µg/L	R17240
n-Propylbenzene	SW8260B	9/4/2008	0.5	1.19	0.60	ND	µg/L	R17240
sec-Butylbenzene	SW8260B	9/4/2008	0.5	1.19	0.60	ND	µg/L	R17240
Styrene	SW8260B	9/4/2008	0.5	1.19	0.60	ND	µg/L	R17240
t-Butyl alcohol (t-Butanol)	SW8260B	9/4/2008	5	1.19	5.95	ND	µg/L	R17240
tert-Amyl methyl ether (TAME)	SW8260B	9/4/2008	0.5	1.19	0.60	ND	µg/L	R17240
tert-Butylbenzene	SW8260B	9/4/2008	0.5	1.19	0.60	ND	µg/L	R17240
Tetrachloroethene	SW8260B	9/4/2008	0.5	1.19	0.60	ND	µg/L	R17240
Toluene	SW8260B	9/4/2008	0.5	1.19	0.60	ND	µg/L	R17240
trans-1,2-Dichloroethene	SW8260B	9/4/2008	0.5	1.19	0.60	ND	µg/L	R17240
trans-1,3-Dichloropropene	SW8260B	9/4/2008	0.5	1.19	0.60	ND	µg/L	R17240
Trichloroethene	SW8260B	9/4/2008	0.5	1.19	0.60	ND	µg/L	R17240
Trichlorofluoromethane	SW8260B	9/4/2008	0.5	1.19	0.60	ND	µg/L	R17240
Vinyl chloride	SW8260B	9/4/2008	0.5	1.19	0.60	ND	µg/L	R17240
Xylenes, Total	SW8260B	9/4/2008	1.5	1.19	1.79	ND	µg/L	R17240
Surr: Dibromofluoromethane	SW8260B	9/4/2008	0	1.19	61.2-131	97.5	%REC	R17240
Surr: 4-Bromofluorobenzene	SW8260B	9/4/2008	0	1.19	64.1-120	109	%REC	R17240
Surr: Toluene-d8	SW8260B	9/4/2008	0	1.19	75.1-127	120	%REC	R17240

Note: Sample was diluted prior to analysis due to sediment in all voas.

These analyses were performed according to State of California Environmental Laboratory Accreditation program, Certificate # 1991

Report prepared for: Charlie Almestad
KLEINFELDER

Date Received: 9/3/2008
Date Reported: 9/10/2008

Client Sample ID: DP-1-W
Sample Location: CTO
Sample Matrix: WATER
Date/Time Sampled 9/2/2008 12:50:00 PM

Lab Sample ID: 0809003-008
Date Prepared: 9/4/2008

Parameters	Analysis Method	Date Analyzed	RL	Dilution Factor	MRL	Result	Units	Analytical Batch
TPH (Diesel)	SW8015B	9/8/2008	0.1	1	0.129	ND	mg/L	R17231
Surr: Pentacosane	SW8015B	9/8/2008	0	1	57.9-125	109	%REC	R17231

Note: Reporting limits increased due to limited sample volume available (sediment present).

TPH (Gasoline)	SW8015B	9/9/2008	0.05	1.47	0.0735	ND	mg/L	R17258
Surr: Trifluorotoluene	SW8015B	9/9/2008	0	1.47	65-135	108	%REC	R17258

Note: Sample was diluted prior to analysis due to sediment in all voas.

These analyses were performed according to State of California Environmental Laboratory Accreditation program, Certificate # 1991

Report prepared for: Charlie Almestad
KLEINFELDER

Date Received: 9/3/2008
Date Reported: 9/10/2008

Client Sample ID: DP-1-W
Sample Location: CTO
Sample Matrix: WATER
Date/Time Sampled 9/2/2008 12:50:00 PM

Lab Sample ID: 0809003-008
Date Prepared: 9/4/2008

Parameters	Analysis Method	Date Analyzed	RL	Dilution Factor	MRL	Result	Units	Analytical Batch
1,1,1,2-Tetrachloroethane	SW8260B	9/4/2008	1	1.22	1.22	ND	µg/L	R17240
1,1,1-Trichloroethane	SW8260B	9/4/2008	0.5	1.22	0.61	ND	µg/L	R17240
1,1,2,2-Tetrachloroethane	SW8260B	9/4/2008	1	1.22	1.22	ND	µg/L	R17240
1,1,2-Trichloroethane	SW8260B	9/4/2008	0.5	1.22	0.61	ND	µg/L	R17240
1,1-Dichloroethane	SW8260B	9/4/2008	0.5	1.22	0.61	ND	µg/L	R17240
1,1-Dichloroethene	SW8260B	9/4/2008	1	1.22	1.22	ND	µg/L	R17240
1,1-Dichloropropene	SW8260B	9/4/2008	0.5	1.22	0.61	ND	µg/L	R17240
1,2,3-Trichlorobenzene	SW8260B	9/4/2008	6	1.22	7.32	ND	µg/L	R17240
1,2,3-Trichloropropane	SW8260B	9/4/2008	1	1.22	1.22	ND	µg/L	R17240
1,2,4-Trichlorobenzene	SW8260B	9/4/2008	6	1.22	7.32	ND	µg/L	R17240
1,2,4-Trimethylbenzene	SW8260B	9/4/2008	0.5	1.22	0.61	ND	µg/L	R17240
1,2-Dibromo-3-chloropropane	SW8260B	9/4/2008	0.5	1.22	0.61	ND	µg/L	R17240
1,2-Dibromoethane (EDB)	SW8260B	9/4/2008	0.5	1.22	0.61	ND	µg/L	R17240
1,2-Dichlorobenzene	SW8260B	9/4/2008	0.5	1.22	0.61	ND	µg/L	R17240
1,2-Dichloroethane (EDC)	SW8260B	9/4/2008	0.5	1.22	0.61	31.7	µg/L	R17240
1,2-Dichloropropane	SW8260B	9/4/2008	6	1.22	7.32	ND	µg/L	R17240
1,3,5-Trimethylbenzene	SW8260B	9/4/2008	0.5	1.22	0.61	ND	µg/L	R17240
1,3-Dichlorobenzene	SW8260B	9/4/2008	0.5	1.22	0.61	ND	µg/L	R17240
1,3-Dichloropropene	SW8260B	9/4/2008	0.5	1.22	0.61	ND	µg/L	R17240
1,4-Dichlorobenzene	SW8260B	9/4/2008	0.5	1.22	0.61	ND	µg/L	R17240
2,2-Dichloropropane	SW8260B	9/4/2008	0.5	1.22	0.61	ND	µg/L	R17240
2-Chloroethyl vinyl ether	SW8260B	9/4/2008	1	1.22	1.22	ND	µg/L	R17240
2-Chlorotoluene	SW8260B	9/4/2008	0.5	1.22	0.61	ND	µg/L	R17240
4-Chlorotoluene	SW8260B	9/4/2008	0.5	1.22	0.61	ND	µg/L	R17240
4-Isopropyltoluene	SW8260B	9/4/2008	0.5	1.22	0.61	ND	µg/L	R17240
Acetone	SW8260B	9/4/2008	10	1.22	12.2	ND	µg/L	R17240
Benzene	SW8260B	9/4/2008	0.5	1.22	0.61	ND	µg/L	R17240
Bromobenzene	SW8260B	9/4/2008	0.5	1.22	0.61	ND	µg/L	R17240
Bromochloromethane	SW8260B	9/4/2008	0.5	1.22	0.61	ND	µg/L	R17240
Bromodichloromethane	SW8260B	9/4/2008	0.5	1.22	0.61	ND	µg/L	R17240
Bromoform	SW8260B	9/4/2008	1	1.22	1.22	ND	µg/L	R17240
Bromomethane	SW8260B	9/4/2008	6	1.22	7.32	ND	µg/L	R17240
Carbon tetrachloride	SW8260B	9/4/2008	1	1.22	1.22	ND	µg/L	R17240
Chlorobenzene	SW8260B	9/4/2008	0.5	1.22	0.61	ND	µg/L	R17240
Chloroform	SW8260B	9/4/2008	0.5	1.22	0.61	ND	µg/L	R17240
Chloromethane	SW8260B	9/4/2008	0.5	1.22	0.61	ND	µg/L	R17240
cis-1,2-Dichloroethene	SW8260B	9/4/2008	0.5	1.22	0.61	ND	µg/L	R17240
cis-1,3-Dichloropropene	SW8260B	9/4/2008	0.5	1.22	0.61	ND	µg/L	R17240
Dibromochloromethane	SW8260B	9/4/2008	0.5	1.22	0.61	ND	µg/L	R17240
Dibromomethane	SW8260B	9/4/2008	0.5	1.22	0.61	ND	µg/L	R17240
Dichlorodifluoromethane	SW8260B	9/4/2008	0.5	1.22	0.61	ND	µg/L	R17240
Diisopropyl ether (DIPE)	SW8260B	9/4/2008	0.5	1.22	0.61	ND	µg/L	R17240
Ethyl tert-butyl ether (ETBE)	SW8260B	9/4/2008	0.5	1.22	0.61	ND	µg/L	R17240

These analyses were performed according to State of California Environmental Laboratory Accreditation program, Certificate # 1991

Report prepared for: Charlie Almestad
KLEINFELDER

Date Received: 9/3/2008
Date Reported: 9/10/2008

Client Sample ID: DP-1-W
Sample Location: CTO
Sample Matrix: WATER
Date/Time Sampled 9/2/2008 12:50:00 PM

Lab Sample ID: 0809003-008
Date Prepared: 9/4/2008

Parameters	Analysis Method	Date Analyzed	RL	Dilution Factor	MRL	Result	Units	Analytical Batch
Ethylbenzene	SW8260B	9/4/2008	0.5	1.22	0.61	ND	µg/L	R17240
Freon-113	SW8260B	9/4/2008	1	1.22	1.22	ND	µg/L	R17240
Hexachlorobutadiene	SW8260B	9/4/2008	0.5	1.22	0.61	ND	µg/L	R17240
Isopropylbenzene	SW8260B	9/4/2008	1	1.22	1.22	ND	µg/L	R17240
Methyl tert-butyl ether (MTBE)	SW8260B	9/4/2008	0.5	1.22	0.61	ND	µg/L	R17240
Methylene chloride	SW8260B	9/4/2008	5	1.22	6.10	ND	µg/L	R17240
Naphthalene	SW8260B	9/4/2008	6	1.22	7.32	ND	µg/L	R17240
n-Butylbenzene	SW8260B	9/4/2008	0.5	1.22	0.61	ND	µg/L	R17240
n-Propylbenzene	SW8260B	9/4/2008	0.5	1.22	0.61	ND	µg/L	R17240
sec-Butylbenzene	SW8260B	9/4/2008	0.5	1.22	0.61	ND	µg/L	R17240
Styrene	SW8260B	9/4/2008	0.5	1.22	0.61	ND	µg/L	R17240
t-Butyl alcohol (t-Butanol)	SW8260B	9/4/2008	5	1.22	6.10	ND	µg/L	R17240
tert-Amyl methyl ether (TAME)	SW8260B	9/4/2008	0.5	1.22	0.61	ND	µg/L	R17240
tert-Butylbenzene	SW8260B	9/4/2008	0.5	1.22	0.61	ND	µg/L	R17240
Tetrachloroethene	SW8260B	9/4/2008	0.5	1.22	0.61	ND	µg/L	R17240
Toluene	SW8260B	9/4/2008	0.5	1.22	0.61	ND	µg/L	R17240
trans-1,2-Dichloroethene	SW8260B	9/4/2008	0.5	1.22	0.61	ND	µg/L	R17240
trans-1,3-Dichloropropene	SW8260B	9/4/2008	0.5	1.22	0.61	ND	µg/L	R17240
Trichloroethene	SW8260B	9/4/2008	0.5	1.22	0.61	ND	µg/L	R17240
Trichlorofluoromethane	SW8260B	9/4/2008	0.5	1.22	0.61	ND	µg/L	R17240
Vinyl chloride	SW8260B	9/4/2008	0.5	1.22	0.61	ND	µg/L	R17240
Xylenes, Total	SW8260B	9/4/2008	1.5	1.22	1.83	ND	µg/L	R17240
Surr: Dibromofluoromethane	SW8260B	9/4/2008	0	1.22	61.2-131	90.9	%REC	R17240
Surr: 4-Bromofluorobenzene	SW8260B	9/4/2008	0	1.22	64.1-120	103	%REC	R17240
Surr: Toluene-d8	SW8260B	9/4/2008	0	1.22	75.1-127	95.5	%REC	R17240

Note: Sample was diluted prior to analysis due to sediment in all voas.

These analyses were performed according to State of California Environmental Laboratory Accreditation program, Certificate # 1991

Definitions, legends and Notes

Note	Description
ug/kg	Microgram per kilogram (ppb, part per billion).
ug/L	Microgram per liter (ppb, part per billion).
mg/kg	Milligram per kilogram (ppm, part per million).
mg/L	Milligram per liter (ppm, part per million).
LCS/LCSD	Laboratory control sample/laboratory control sample duplicate.
MDL	Method detection limit.
MRL	Modified reporting limit. When sample is subject to dilution, reporting limit times dilution factor yields MRL.
MS/MSD	Matrix spike/matrix spike duplicate.
N/A	Not applicable.
ND	Not detected at or above detection limit.
NR	Not reported.
QC	Quality Control.
RL	Reporting limit.
% RPD	Percent relative difference.
a	pH was measured immediately upon the receipt of the sample, but it was still done outside the holding time.
sub	Analyzed by subcontracting laboratory, Lab Certificate #

These analyses were performed according to State of California Environmental Laboratory Accreditation program, Certificate # 1991

Torrent Laboratory, Inc.

Date: *10-Sep-08*

CLIENT: KLEINFELDER
Work Order: 0809003
Project: 95539

ANALYTICAL QC SUMMARY REPORT

BatchID: R17229

Sample ID **SDSG080904A-MB** SampType: **MBLK** TestCode: **TPHDOSG_S** Units: **mg/Kg** Prep Date: **9/4/2008** RunNo: **17229**
Client ID: **ZZZZZ** Batch ID: **R17229** TestNo: **SW8015B** Analysis Date: **9/4/2008** SeqNo: **246852**

Analyte	Result	PQL	SPK value	SPK Ref Val	%REC	LowLimit	HighLimit	RPD Ref Val	%RPD	RPDLimit	Qual
TPH (Diesel-SG)	ND	2.00									
Surr: Pentacosane	2.834	0	3.3	0	85.9	61.5	133				

Sample ID **0809003-001A MS** SampType: **MS** TestCode: **TPHDOSG_S** Units: **mg/Kg** Prep Date: **9/4/2008** RunNo: **17229**
Client ID: **DP-4-12** Batch ID: **R17229** TestNo: **SW8015B** Analysis Date: **9/5/2008** SeqNo: **246874**

Analyte	Result	PQL	SPK value	SPK Ref Val	%REC	LowLimit	HighLimit	RPD Ref Val	%RPD	RPDLimit	Qual
TPH (Diesel-SG)	27.84	2.00	33.33	0	83.5	50.8	111				
Surr: Pentacosane	2.662	0	3.3	0	80.7	61.5	133				

Sample ID **0809003-001A MSD** SampType: **MSD** TestCode: **TPHDOSG_S** Units: **mg/Kg** Prep Date: **9/4/2008** RunNo: **17229**
Client ID: **DP-4-12** Batch ID: **R17229** TestNo: **SW8015B** Analysis Date: **9/5/2008** SeqNo: **246875**

Analyte	Result	PQL	SPK value	SPK Ref Val	%REC	LowLimit	HighLimit	RPD Ref Val	%RPD	RPDLimit	Qual
TPH (Diesel-SG)	27.36	2.00	33.33	0	82.1	50.8	111	27.84	1.73	30	
Surr: Pentacosane	2.530	0	3.3	0	76.7	61.5	133	0	0	0	

Qualifiers:
E Value above quantitation range
ND Not Detected at the Reporting Limit
H Holding times for preparation or analysis exceeded
R RPD outside accepted recovery limits
J Analyte detected below quantitation limits
S Spike Recovery outside accepted recovery limits

CLIENT: KLEINFELDER
Work Order: 0809003
Project: 95539

ANALYTICAL QC SUMMARY REPORT

BatchID: R17231

Sample ID	WD080905A-MB	SampType:	MBLK	TestCode:	TPHDO_W	Units:	mg/L	Prep Date:	9/5/2008	RunNo:	17231
Client ID:	ZZZZZ	Batch ID:	R17231	TestNo:	SW8015B			Analysis Date:	9/5/2008	SeqNo:	246751

Analyte	Result	PQL	SPK value	SPK Ref Val	%REC	LowLimit	HighLimit	RPD Ref Val	%RPD	RPDLimit	Qual
TPH (Diesel)	ND	0.100									
Surr: Pentacosane	0.08200	0	0.1	0	82.0	57.9	125				

Sample ID	WD080905A-LCS	SampType:	LCS	TestCode:	TPHDO_W	Units:	mg/L	Prep Date:	9/5/2008	RunNo:	17231
Client ID:	ZZZZZ	Batch ID:	R17231	TestNo:	SW8015B			Analysis Date:	9/5/2008	SeqNo:	246752

Analyte	Result	PQL	SPK value	SPK Ref Val	%REC	LowLimit	HighLimit	RPD Ref Val	%RPD	RPDLimit	Qual
TPH (Diesel)	0.8670	0.100	1	0	86.7	50.3	125				
Surr: Pentacosane	0.1040	0	0.1	0	104	57.9	125				

Sample ID	WD080905A-LCSD	SampType:	LCSD	TestCode:	TPHDO_W	Units:	mg/L	Prep Date:	9/5/2008	RunNo:	17231
Client ID:	ZZZZZ	Batch ID:	R17231	TestNo:	SW8015B			Analysis Date:	9/5/2008	SeqNo:	246753

Analyte	Result	PQL	SPK value	SPK Ref Val	%REC	LowLimit	HighLimit	RPD Ref Val	%RPD	RPDLimit	Qual
TPH (Diesel)	0.8750	0.100	1	0	87.5	50.3	125	0.867	0.918	20	
Surr: Pentacosane	0.1000	0	0.1	0	100	57.9	125	0	0	0	

Qualifiers:

E	Value above quantitation range	H	Holding times for preparation or analysis exceeded	J	Analyte detected below quantitation limits
ND	Not Detected at the Reporting Limit	R	RPD outside accepted recovery limits	S	Spike Recovery outside accepted recovery limits

CLIENT: KLEINFELDER
Work Order: 0809003
Project: 95539

ANALYTICAL QC SUMMARY REPORT

BatchID: R17240

Sample ID	MB_R17240	SampType:	MBLK	TestCode:	8260B_W	Units:	µg/L	Prep Date:	9/4/2008	RunNo:	17240
Client ID:	ZZZZZ	Batch ID:	R17240	TestNo:	SW8260B			Analysis Date:	9/4/2008	SeqNo:	246898

Analyte	Result	PQL	SPK value	SPK Ref Val	%REC	LowLimit	HighLimit	RPD Ref Val	%RPD	RPDLimit	Qual
1,1,1,2-Tetrachloroethane	ND	1.00									
1,1,1-Trichloroethane	ND	0.500									
1,1,2,2-Tetrachloroethane	ND	1.00									
1,1,2-Trichloroethane	ND	0.500									
1,1-Dichloroethane	ND	0.500									
1,1-Dichloroethene	ND	1.00									
1,1-Dichloropropene	ND	0.500									
1,2,3-Trichlorobenzene	ND	6.00									
1,2,3-Trichloropropane	ND	1.00									
1,2,4-Trichlorobenzene	ND	6.00									
1,2,4-Trimethylbenzene	ND	0.500									
1,2-Dibromo-3-chloropropane	ND	0.500									
1,2-Dibromoethane (EDB)	ND	0.500									
1,2-Dichlorobenzene	ND	0.500									
1,2-Dichloroethane (EDC)	ND	0.500									
1,2-Dichloropropane	ND	6.00									
1,3,5-Trimethylbenzene	ND	0.500									
1,3-Dichlorobenzene	ND	0.500									
1,4-Dichlorobenzene	ND	0.500									
2,2-Dichloropropane	ND	0.500									
2-Chloroethyl vinyl ether	ND	1.00									
2-Chlorotoluene	ND	0.500									
4-Chlorotoluene	ND	0.500									
4-Isopropyltoluene	ND	0.500									
Acetone	ND	10.0									
Benzene	ND	0.500									
Bromobenzene	ND	0.500									
Bromochloromethane	ND	0.500									
Bromodichloromethane	ND	0.500									
Bromoform	ND	1.00									
Bromomethane	ND	6.00									

Qualifiers:

E	Value above quantitation range	H	Holding times for preparation or analysis exceeded	J	Analyte detected below quantitation limits
ND	Not Detected at the Reporting Limit	R	RPD outside accepted recovery limits	S	Spike Recovery outside accepted recovery limits

CLIENT: KLEINFELDER
Work Order: 0809003
Project: 95539

ANALYTICAL QC SUMMARY REPORT

BatchID: R17240

Sample ID	MB_R17240	SampType:	MBLK	TestCode:	8260B_W	Units:	µg/L	Prep Date:	9/4/2008	RunNo:	17240
Client ID:	ZZZZZ	Batch ID:	R17240	TestNo:	SW8260B			Analysis Date:	9/4/2008	SeqNo:	246898

Analyte	Result	PQL	SPK value	SPK Ref Val	%REC	LowLimit	HighLimit	RPD Ref Val	%RPD	RPDLimit	Qual
Carbon tetrachloride	ND	1.00									
Chlorobenzene	ND	0.500									
Chloroform	ND	0.500									
Chloromethane	ND	0.500									
cis-1,2-Dichloroethene	ND	0.500									
cis-1,3-Dichloropropene	ND	0.500									
Dibromochloromethane	ND	0.500									
Dibromomethane	ND	0.500									
Dichlorodifluoromethane	ND	0.500									
Diisopropyl ether (DIPE)	ND	0.500									
Ethyl tert-butyl ether (ETBE)	ND	0.500									
Ethylbenzene	ND	0.500									
Freon-113	ND	1.00									
Hexachlorobutadiene	ND	0.500									
Isopropylbenzene	ND	1.00									
Methyl tert-butyl ether (MTBE)	ND	0.500									
Methylene chloride	ND	5.00									
Naphthalene	ND	6.00									
n-Butylbenzene	ND	0.500									
n-Propylbenzene	ND	0.500									
sec-Butylbenzene	ND	0.500									
Styrene	ND	0.500									
t-Butyl alcohol (t-Butanol)	ND	5.00									
tert-Amyl methyl ether (TAME)	ND	0.500									
tert-Butylbenzene	ND	0.500									
Tetrachloroethene	ND	0.500									
Toluene	ND	0.500									
trans-1,2-Dichloroethene	ND	0.500									
trans-1,3-Dichloropropene	ND	0.500									
Trichloroethene	ND	0.500									
Trichlorofluoromethane	ND	0.500									

Qualifiers:

E	Value above quantitation range	H	Holding times for preparation or analysis exceeded	J	Analyte detected below quantitation limits
ND	Not Detected at the Reporting Limit	R	RPD outside accepted recovery limits	S	Spike Recovery outside accepted recovery limits

CLIENT: KLEINFELDER
Work Order: 0809003
Project: 95539

ANALYTICAL QC SUMMARY REPORT

BatchID: R17240

Sample ID	SampType	TestCode	Units	Prep Date	RunNo
MB_R17240	**MBLK**	**8260B_W**	**µg/L**	**9/4/2008**	**17240**
Client ID: **ZZZZZ**	Batch ID: **R17240**	TestNo: **SW8260B**		Analysis Date: **9/4/2008**	SeqNo: **246898**

Analyte	Result	PQL	SPK value	SPK Ref Val	%REC	LowLimit	HighLimit	RPD Ref Val	%RPD	RPDLimit	Qual
Vinyl chloride	ND	0.500									
Xylenes, Total	ND	1.50									
Surr: Dibromofluoromethane	12.29	0	11.36	0	108	61.2	131				
Surr: 4-Bromofluorobenzene	11.85	0	11.36	0	104	64.1	120				
Surr: Toluene-d8	12.45	0	11.36	0	110	75.1	127				

Sample ID	SampType	TestCode	Units	Prep Date	RunNo
LCS_R17240	**LCS**	**8260B_W**	**µg/L**	**9/4/2008**	**17240**
Client ID: **ZZZZZ**	Batch ID: **R17240**	TestNo: **SW8260B**		Analysis Date: **9/4/2008**	SeqNo: **246899**

Analyte	Result	PQL	SPK value	SPK Ref Val	%REC	LowLimit	HighLimit	RPD Ref Val	%RPD	RPDLimit	Qual
1,1-Dichloroethene	14.29	1.00	17.04	0	83.9	61.4	129				
Benzene	19.33	0.500	17.04	0	113	66.9	140				
Chlorobenzene	19.78	0.500	17.04	0	116	73.9	137				
Toluene	19.41	0.500	17.04	0	114	76.6	123				
Trichloroethene	19.41	0.500	17.04	0	114	69.3	144				
Surr: Dibromofluoromethane	12.61	0	11.36	0	111	61.2	131				
Surr: 4-Bromofluorobenzene	11.52	0	11.36	0	101	64.1	120				
Surr: Toluene-d8	13.16	0	11.36	0	116	75.1	127				

Sample ID	SampType	TestCode	Units	Prep Date	RunNo
LCSD_R17240	**LCSD**	**8260B_W**	**µg/L**	**9/4/2008**	**17240**
Client ID: **ZZZZZ**	Batch ID: **R17240**	TestNo: **SW8260B**		Analysis Date: **9/4/2008**	SeqNo: **246900**

Analyte	Result	PQL	SPK value	SPK Ref Val	%REC	LowLimit	HighLimit	RPD Ref Val	%RPD	RPDLimit	Qual
1,1-Dichloroethene	14.87	1.00	17.04	0	87.3	61.4	129	14.29	3.98	20	
Benzene	17.94	0.500	17.04	0	105	66.9	140	19.33	7.46	20	
Chlorobenzene	17.47	0.500	17.04	0	103	73.9	137	19.78	12.4	20	
Toluene	19.81	0.500	17.04	0	116	76.6	123	19.41	2.04	20	
Trichloroethene	17.55	0.500	17.04	0	103	69.3	144	19.41	10.1	20	
Surr: Dibromofluoromethane	13.23	0	11.36	0	116	61.2	131	0	0	0	
Surr: 4-Bromofluorobenzene	12.46	0	11.36	0	110	64.1	120	0	0	0	
Surr: Toluene-d8	11.25	0	11.36	0	99.0	75.1	127	0	0	0	

Qualifiers:
E Value above quantitation range
ND Not Detected at the Reporting Limit
H Holding times for preparation or analysis exceeded
R RPD outside accepted recovery limits
J Analyte detected below quantitation limits
S Spike Recovery outside accepted recovery limits

CLIENT: KLEINFELDER
Work Order: 0809003
Project: 95539

ANALYTICAL QC SUMMARY REPORT

BatchID: R17242

Sample ID **MBLK**	SampType: **MBLK**	TestCode: **TOC_S**	Units: **mg/Kg**	Prep Date:	RunNo: **17242**
Client ID: **ZZZZZ**	Batch ID: **R17242**	TestNo: **SW9060**		Analysis Date: **9/5/2008**	SeqNo: **246953**

Analyte	Result	PQL	SPK value	SPK Ref Val	%REC	LowLimit	HighLimit	RPD Ref Val	%RPD	RPDLimit	Qual
Total Organic Carbon	ND	25									

Sample ID **LCS**	SampType: **LCS**	TestCode: **TOC_S**	Units: **mg/Kg**	Prep Date:	RunNo: **17242**
Client ID: **ZZZZZ**	Batch ID: **R17242**	TestNo: **SW9060**		Analysis Date: **9/5/2008**	SeqNo: **246951**

Analyte	Result	PQL	SPK value	SPK Ref Val	%REC	LowLimit	HighLimit	RPD Ref Val	%RPD	RPDLimit	Qual
Total Organic Carbon	211200	25	266600	0	79.2	60	140				

Sample ID **LCSD**	SampType: **LCSD**	TestCode: **TOC_S**	Units: **mg/Kg**	Prep Date:	RunNo: **17242**
Client ID: **ZZZZZ**	Batch ID: **R17242**	TestNo: **SW9060**		Analysis Date: **9/5/2008**	SeqNo: **246952**

Analyte	Result	PQL	SPK value	SPK Ref Val	%REC	LowLimit	HighLimit	RPD Ref Val	%RPD	RPDLimit	Qual
Total Organic Carbon	215800	25	266600	0	80.9	60	140	211200	2.15	30	

Qualifiers:

E	Value above quantitation range	H	Holding times for preparation or analysis exceeded	J	Analyte detected below quantitation limits
ND	Not Detected at the Reporting Limit	R	RPD outside accepted recovery limits	S	Spike Recovery outside accepted recovery limits

CLIENT: KLEINFELDER
Work Order: 0809003
Project: 95539

ANALYTICAL QC SUMMARY REPORT

BatchID: R17247

Sample ID	MB_R17247	SampType:	MBLK	TestCode:	8260B_S	Units:	µg/Kg	Prep Date:	9/8/2008	RunNo:	17247
Client ID:	ZZZZZ	Batch ID:	R17247	TestNo:	SW8260B			Analysis Date:	9/8/2008	SeqNo:	247003

Analyte	Result	PQL	SPK value	SPK Ref Val	%REC	LowLimit	HighLimit	RPD Ref Val	%RPD	RPDLimit	Qual
1,1,1,2-Tetrachloroethane	ND	10									
1,1,1-Trichloroethane	ND	10									
1,1,2,2-Tetrachloroethane	ND	10									
1,1,2-Trichloroethane	ND	10									
1,1-Dichloroethane	ND	10									
1,1-Dichloroethene	ND	10									
1,1-Dichloropropene	ND	10									
1,2,3-Trichlorobenzene	ND	10									
1,2,3-Trichloropropane	ND	10									
1,2,4-Trichlorobenzene	ND	10									
1,2,4-Trimethylbenzene	ND	10									
1,2-Dibromo-3-chloropropane	ND	10									
1,2-Dibromoethane (EDB)	ND	10									
1,2-Dichlorobenzene	ND	10									
1,2-Dichloroethane (EDC)	ND	10									
1,2-Dichloropropane	ND	10									
1,3,5-Trimethylbenzene	ND	10									
1,3-Dichlorobenzene	ND	10									
1,3-Dichloropropene	ND	10									
1,4-Dichlorobenzene	ND	10									
2,2-Dichloropropane	ND	10									
2-Chloroethyl vinyl ether	ND	10									
2-Chlorotoluene	ND	10									
4-Chlorotoluene	ND	10									
4-Isopropyltoluene	ND	10									
Benzene	ND	10									
Bromobenzene	ND	10									
Bromochloromethane	ND	10									
Bromodichloromethane	ND	10									
Bromoform	ND	10									
Bromomethane	ND	10									

Qualifiers:

E	Value above quantitation range	H	Holding times for preparation or analysis exceeded	J	Analyte detected below quantitation limits
ND	Not Detected at the Reporting Limit	R	RPD outside accepted recovery limits	S	Spike Recovery outside accepted recovery limits

CLIENT: KLEINFELDER
Work Order: 0809003
Project: 95539

ANALYTICAL QC SUMMARY REPORT

BatchID: R17247

Sample ID	MB_R17247	SampType:	MBLK	TestCode:	8260B_S	Units:	µg/Kg	Prep Date:	9/8/2008	RunNo:	17247
Client ID:	ZZZZZ	Batch ID:	R17247	TestNo:	SW8260B			Analysis Date:	9/8/2008	SeqNo:	247003

Analyte	Result	PQL	SPK value	SPK Ref Val	%REC	LowLimit	HighLimit	RPD Ref Val	%RPD	RPDLimit	Qual
Carbon tetrachloride	ND	10									
Chlorobenzene	ND	10									
Chloroform	ND	10									
Chloromethane	ND	10									
cis-1,2-Dichloroethene	ND	10									
cis-1,3-Dichloropropene	ND	10									
Dibromochloromethane	ND	10									
Dibromomethane	ND	10									
Dichlorodifluoromethane	ND	10									
Ethyl tert-butyl ether (ETBE)	ND	10									
Ethylbenzene	ND	10									
Freon-113	ND	10									
Hexachlorobutadiene	ND	10									
Isopropyl Ether	ND	10									
Isopropylbenzene	ND	10									
Methyl tert-butyl ether (MTBE)	ND	10									
Methylene chloride	ND	50									
Naphthalene	ND	20									
n-Butylbenzene	ND	10									
n-Propylbenzene	ND	10									
sec-Butylbenzene	ND	10									
Styrene	ND	10									
t-Butyl alcohol (t-Butanol)	ND	50									
tert-Amyl methyl ether (TAME)	ND	10									
tert-Butylbenzene	ND	10									
Tetrachloroethene	ND	10									
Toluene	ND	10									
trans-1,2-Dichloroethene	ND	10									
trans-1,3-Dichloropropene	ND	10									
Trichloroethene	ND	10									
Trichlorofluoromethane	ND	10									

Qualifiers:

E	Value above quantitation range	H	Holding times for preparation or analysis exceeded	J	Analyte detected below quantitation limits
ND	Not Detected at the Reporting Limit	R	RPD outside accepted recovery limits	S	Spike Recovery outside accepted recovery limits

CLIENT: KLEINFELDER
Work Order: 0809003
Project: 95539

ANALYTICAL QC SUMMARY REPORT

BatchID: R17247

Sample ID	MB_R17247	SampType:	MBLK	TestCode:	8260B_S	Units:	µg/Kg	Prep Date:	9/8/2008	RunNo:	17247
Client ID:	ZZZZZ	Batch ID:	R17247	TestNo:	SW8260B			Analysis Date:	9/8/2008	SeqNo:	247003

Analyte	Result	PQL	SPK value	SPK Ref Val	%REC	LowLimit	HighLimit	RPD Ref Val	%RPD	RPDLimit	Qual
Vinyl chloride	ND	10									
Xylenes, Total	ND	15									
Surr: 4-Bromofluorobenzene	45.53	0	50	0	91.1	55.8	141				
Surr: Dibromofluoromethane	53.35	0	50	0	107	59.8	148				
Surr: Toluene-d8	44.25	0	50	0	88.5	55.2	133				

Sample ID	LCS_R17247	SampType:	LCS	TestCode:	8260B_S	Units:	µg/Kg	Prep Date:	9/8/2008	RunNo:	17247
Client ID:	ZZZZZ	Batch ID:	R17247	TestNo:	SW8260B			Analysis Date:	9/8/2008	SeqNo:	247004

Analyte	Result	PQL	SPK value	SPK Ref Val	%REC	LowLimit	HighLimit	RPD Ref Val	%RPD	RPDLimit	Qual
1,1-Dichloroethene	53.90	10	50	0	108	53.7	139				
Benzene	50.58	10	50	0	101	66.5	135				
Chlorobenzene	53.16	10	50	0	106	57.5	150				
Toluene	42.57	10	50	0	85.1	56.8	134				
Trichloroethene	58.08	10	50	0	116	57.4	134				
Surr: 4-Bromofluorobenzene	50.05	0	50	0	100	55.8	141				
Surr: Dibromofluoromethane	66.19	0	50	0	132	59.8	148				
Surr: Toluene-d8	49.78	0	50	0	99.6	55.2	133				

Sample ID	LCSD_R17247	SampType:	LCSD	TestCode:	8260B_S	Units:	µg/Kg	Prep Date:	9/8/2008	RunNo:	17247
Client ID:	ZZZZZ	Batch ID:	R17247	TestNo:	SW8260B			Analysis Date:	9/8/2008	SeqNo:	247005

Analyte	Result	PQL	SPK value	SPK Ref Val	%REC	LowLimit	HighLimit	RPD Ref Val	%RPD	RPDLimit	Qual
1,1-Dichloroethene	52.67	10	50	0	105	53.7	139	53.9	2.31	30	
Benzene	55.71	10	50	0	111	66.5	135	50.58	9.65	30	
Chlorobenzene	42.01	10	50	0	84.0	57.5	150	53.16	23.4	30	
Toluene	45.38	10	50	0	90.8	56.8	134	42.57	6.39	30	
Trichloroethene	60.23	10	50	0	120	57.4	134	58.08	3.63	30	
Surr: 4-Bromofluorobenzene	51.38	0	50	0	103	55.8	141	0	0	0	
Surr: Dibromofluoromethane	68.10	0	50	0	136	59.8	148	0	0	0	
Surr: Toluene-d8	48.88	0	50	0	97.8	55.2	133	0	0	0	

Qualifiers:
E Value above quantitation range
ND Not Detected at the Reporting Limit
H Holding times for preparation or analysis exceeded
R RPD outside accepted recovery limits
J Analyte detected below quantitation limits
S Spike Recovery outside accepted recovery limits

CLIENT: KLEINFELDER
Work Order: 0809003
Project: 95539

ANALYTICAL QC SUMMARY REPORT

BatchID: R17247

Sample ID	0809003-004A MS	SampType:	MS	TestCode:	8260B_S	Units:	µg/Kg	Prep Date:	9/8/2008	RunNo:	17247
Client ID:	DP-1-14	Batch ID:	R17247	TestNo:	SW8260B			Analysis Date:	9/8/2008	SeqNo:	247010

Analyte	Result	PQL	SPK value	SPK Ref Val	%REC	LowLimit	HighLimit	RPD Ref Val	%RPD	RPDLimit	Qual
1,1-Dichloroethene	59.62	10	50	0	119	53.7	139				
Benzene	53.90	10	50	0	108	66.5	135				
Chlorobenzene	55.68	10	50	0	111	57.5	150				
Toluene	45.47	10	50	0	90.9	56.8	134				
Trichloroethene	53.20	10	50	0	106	57.4	134				
Surr: 4-Bromofluorobenzene	48.80	0	50	0	97.6	55.8	141				
Surr: Dibromofluoromethane	64.14	0	50	0	128	59.8	148				
Surr: Toluene-d8	49.08	0	50	0	98.2	55.2	133				

Sample ID	0809003-004A MSD	SampType:	MSD	TestCode:	8260B_S	Units:	µg/Kg	Prep Date:	9/8/2008	RunNo:	17247
Client ID:	DP-1-14	Batch ID:	R17247	TestNo:	SW8260B			Analysis Date:	9/8/2008	SeqNo:	247011

Analyte	Result	PQL	SPK value	SPK Ref Val	%REC	LowLimit	HighLimit	RPD Ref Val	%RPD	RPDLimit	Qual
1,1-Dichloroethene	55.06	10	50	0	110	53.7	139	59.62	7.95	30	
Benzene	49.77	10	50	0	99.5	66.5	135	53.9	7.97	30	
Chlorobenzene	47.01	10	50	0	94.0	57.5	150	55.68	16.9	30	
Toluene	39.50	10	50	0	79.0	56.8	134	45.47	14.1	30	
Trichloroethene	52.45	10	50	0	105	57.4	134	53.2	1.42	30	
Surr: 4-Bromofluorobenzene	46.48	0	50	0	93.0	55.8	141	0	0	0	
Surr: Dibromofluoromethane	67.39	0	50	0	135	59.8	148	0	0	0	
Surr: Toluene-d8	48.94	0	50	0	97.9	55.2	133	0	0	0	

Qualifiers:

E	Value above quantitation range	H	Holding times for preparation or analysis exceeded	J	Analyte detected below quantitation limits
ND	Not Detected at the Reporting Limit	R	RPD outside accepted recovery limits	S	Spike Recovery outside accepted recovery limits

CLIENT: KLEINFELDER
Work Order: 0809003
Project: 95539

ANALYTICAL QC SUMMARY REPORT

BatchID: R17253

Sample ID **MB_R17253** SampType: **MBLK** TestCode: **TPHGAS_S** Units: **mg/Kg** Prep Date: **9/8/2008** RunNo: **17253**
Client ID: **ZZZZZ** Batch ID: **R17253** TestNo: **SW8015B** Analysis Date: **9/8/2008** SeqNo: **247108**

Analyte	Result	PQL	SPK value	SPK Ref Val	%REC	LowLimit	HighLimit	RPD Ref Val	%RPD	RPDLimit	Qual
TPH (Gasoline)	ND	0.100									
Surr: Trifluorotoluene	0.2118	0	0.2	0	106	65	135				

Sample ID **LCS_R17253** SampType: **LCS** TestCode: **TPHGAS_S** Units: **mg/Kg** Prep Date: **9/8/2008** RunNo: **17253**
Client ID: **ZZZZZ** Batch ID: **R17253** TestNo: **SW8015B** Analysis Date: **9/8/2008** SeqNo: **247109**

Analyte	Result	PQL	SPK value	SPK Ref Val	%REC	LowLimit	HighLimit	RPD Ref Val	%RPD	RPDLimit	Qual
TPH (Gasoline)	0.8510	0.100	1	0	85.1	65	135				
Surr: Trifluorotoluene	0.2326	0	0.2	0	116	65	135				

Sample ID **LCSD_R17253** SampType: **LCSD** TestCode: **TPHGAS_S** Units: **mg/Kg** Prep Date: **9/8/2008** RunNo: **17253**
Client ID: **ZZZZZ** Batch ID: **R17253** TestNo: **SW8015B** Analysis Date: **9/8/2008** SeqNo: **247110**

Analyte	Result	PQL	SPK value	SPK Ref Val	%REC	LowLimit	HighLimit	RPD Ref Val	%RPD	RPDLimit	Qual
TPH (Gasoline)	0.8733	0.100	1	0	87.3	65	135	0.851	2.59	30	
Surr: Trifluorotoluene	0.2280	0	0.2	0	114	65	135	0	0	30	

Qualifiers:
E Value above quantitation range
ND Not Detected at the Reporting Limit
H Holding times for preparation or analysis exceeded
R RPD outside accepted recovery limits
J Analyte detected below quantitation limits
S Spike Recovery outside accepted recovery limits

CLIENT: KLEINFELDER
Work Order: 0809003
Project: 95539

ANALYTICAL QC SUMMARY REPORT

BatchID: R17258

Sample ID **BLK-R17258** SampType: **MBLK** TestCode: **TPHGAS_W** Units: **mg/L** Prep Date: **9/9/2008** RunNo: **17258**
Client ID: **ZZZZZ** Batch ID: **R17258** TestNo: **SW8015B** Analysis Date: **9/9/2008** SeqNo: **247198**

Analyte	Result	PQL	SPK value	SPK Ref Val	%REC	LowLimit	HighLimit	RPD Ref Val	%RPD	RPDLimit	Qual
TPH (Gasoline)	ND	0.0500									
Surr: Trifluorotoluene	0.07550	0	0.1136	0	66.5	65	135				

Sample ID **LCS_R17258** SampType: **LCS** TestCode: **TPHGAS_W** Units: **mg/L** Prep Date: **9/9/2008** RunNo: **17258**
Client ID: **ZZZZZ** Batch ID: **R17258** TestNo: **SW8015B** Analysis Date: **9/9/2008** SeqNo: **247152**

Analyte	Result	PQL	SPK value	SPK Ref Val	%REC	LowLimit	HighLimit	RPD Ref Val	%RPD	RPDLimit	Qual
TPH (Gasoline)	0.1822	0.0500	0.2272	0	80.2	65	135				
Surr: Trifluorotoluene	0.1210	0	0.1136	0	107	65	135				

Sample ID **LCSD_R17258** SampType: **LCSD** TestCode: **TPHGAS_W** Units: **mg/L** Prep Date: **9/9/2008** RunNo: **17258**
Client ID: **ZZZZZ** Batch ID: **R17258** TestNo: **SW8015B** Analysis Date: **9/9/2008** SeqNo: **247153**

Analyte	Result	PQL	SPK value	SPK Ref Val	%REC	LowLimit	HighLimit	RPD Ref Val	%RPD	RPDLimit	Qual
TPH (Gasoline)	0.1838	0.0500	0.2272	0	80.9	65	135	0.1822	0.874	20	
Surr: Trifluorotoluene	0.1183	0	0.1136	0	104	65	135	0	0	20	

Qualifiers:

E	Value above quantitation range	H	Holding times for preparation or analysis exceeded	J	Analyte detected below quantitation limits
ND	Not Detected at the Reporting Limit	R	RPD outside accepted recovery limits	S	Spike Recovery outside accepted recovery limits

KLEINFELDER
Bright People. Right Solutions.

0809003

PROJECT NO.: 95539
PROJECT NAME: CTO
L.P. NO. (PO. NO.):
SAMPLERS: (Signature/Number)
RECEIVING LAB: Torrent
INSTRUCTIONS/REMARKS: Std TAT

	DATE MM/DD/YY	SAMPLE I.D. TIME HH-MM-SS	SAMPLE I.D.	MATRIX	NO. OF CONTAINERS	TYPE OF CONTAINERS	TPH-G/8015M w/ silica gel clean up	VOC 8260	Fuel oxygenates 8260	TOC 415.1								
001A 1	9/2/08	745	DP-4-12	Soil	1	Tube	X	X	X	X	X							-001
002A 2		830	DP-3-12				X	X	X	X	X							-002
003A 3		1035	DP-2-13				X	X	X	X	X							-003
004A 4		1155	DP-1-14				X	X	X	X	X							-004
005A 5		946	DP-4-W	Wtr	6	VOA	X		X	X								-005
006A 6		900	DP-3-W		6		X		X	X								-006
007A 7		1220	DP-2-W		6		X		X	X								-007
008A 8		1250	DP-1-W		6		X		X	X								-008
009A 9		946	DP-4-W	WTR	1	1L Amber	X		X	X								-005
010A 10		900	DP-3-W				X		X	X								-006
011A 11		1220	DP-2-W				X		X	X								-007
012A 12		1250	DP-1-W				X		X	X								-008
13																		B samples only
14																		Water samples logged based
15																		on time - 8 VOA, 1 Amber for
16																		each time period (946, 900, 1220, 1250)
17																		8/4/08
18																		Question - Call
19																		Jeff Gravesen
20																		925 580-8302

Relinquished by: (Signature)	Date/Time	Received by: (Signature)
	9/2/08 1800	9/03/08 1055
Relinquished by: (Signature)	Date/Time	Received by: (Signature)
	9/03/08 1215	9/3/08 1215
Relinquished by: (Signature)	Date/Time	Received for Laboratory by: (Signature)

Instructions/Remarks:
Email
CAlmestad@kleinfelder
JGravesen@kleinfelder

Send Results To:
Kleinfelder
1970 Broadway # 710
Oakland CA 94612
Attn: Charlie Almestad

ENV-02 REV 05/08)

White – Sampler Canary – Return Copy To Shipper Pink – Lab Copy

CHAIN OF CUSTODY

COC № 11512

Torrent
LABORATORY, INC.

September 12, 2008

Charlie Almestad
KLEINFELDER
1970 Broadway, Suite 710
Oakland, CA 94612

TEL: (510) 628-9000
FAX (510) 628-9009

RE: 95539

Order No.: 0809020

Dear Charlie Almestad:

Torrent Laboratory, Inc. received 7 samples on 9/5/2008 for the analyses presented in the following report.

All data for associated QC met EPA or laboratory specification(s) except where noted in the case narrative.
Reported data is applicable for only the samples received as part of the order number referenced above.

Torrent Laboratory, Inc, is certified by the State of California, ELAP #1991. If you have any questions regarding these tests results, please feel free to contact the Project Management Team at (408)263-5258;ext: 204.

Sincerely,

Laboratory Director Date

Patti Sandrock
QA Officer

TORRENT LABORATORY, INC.

483 Sinclair Frontage Road • Milpitas, CA • Phone: (408) 263-5258 • Fax: (408) 263-8293

Visit us at www.torrentlab.com email: analysis@torrentlab.com

Report prepared for: Charlie Almestad
KLEINFELDER

Date Received: 9/5/2008
Date Reported: 9/12/2008

Client Sample ID: MW-7-13
Sample Location: CTO
Sample Matrix: SOIL
Date/Time Sampled 9/3/2008 7:40:00 AM

Lab Sample ID: 0809020-001
Date Prepared: 9/8/2008

Parameters	Analysis Method	Date Analyzed	RL	Dilution Factor	MRL	Result	Units	Analytical Batch
TPH (Diesel-SG)	SW8015B	9/10/2008	2	1	2.00	ND	mg/Kg	R17278
Surr: Pentacosane	SW8015B	9/10/2008	0	1	61.5-133	85.4	%REC	R17278
TPH (Gasoline)	SW8015B	9/8/2008	0.1	1	0.100	ND	mg/Kg	R17253
Surr: Trifluorotoluene	SW8015B	9/8/2008	0	1	65-135	53 S	%REC	R17253

Note: S- Surrogate recovery out of limit. A matrix effect suspected.

These analyses were performed according to State of California Environmental Laboratory Accreditation program, Certificate # 1991

Report prepared for: Charlie Almestad
KLEINFELDER

Date Received: 9/5/2008
Date Reported: 9/12/2008

Client Sample ID: MW-7-13
Sample Location: CTO
Sample Matrix: SOIL
Date/Time Sampled 9/3/2008 7:40:00 AM

Lab Sample ID: 0809020-001
Date Prepared: 9/8/2008

Parameters	Analysis Method	Date Analyzed	RL	Dilution Factor	MRL	Result	Units	Analytical Batch
1,1,1,2-Tetrachloroethane	SW8260B	9/8/2008	10	1	10	ND	µg/Kg	R17247
1,1,1-Trichloroethane	SW8260B	9/8/2008	10	1	10	ND	µg/Kg	R17247
1,1,2,2-Tetrachloroethane	SW8260B	9/8/2008	10	1	10	ND	µg/Kg	R17247
1,1,2-Trichloroethane	SW8260B	9/8/2008	10	1	10	ND	µg/Kg	R17247
1,1-Dichloroethane	SW8260B	9/8/2008	10	1	10	ND	µg/Kg	R17247
1,1-Dichloroethene	SW8260B	9/8/2008	10	1	10	ND	µg/Kg	R17247
1,1-Dichloropropene	SW8260B	9/8/2008	10	1	10	ND	µg/Kg	R17247
1,2,3-Trichlorobenzene	SW8260B	9/8/2008	10	1	10	ND	µg/Kg	R17247
1,2,3-Trichloropropane	SW8260B	9/8/2008	10	1	10	ND	µg/Kg	R17247
1,2,4-Trichlorobenzene	SW8260B	9/8/2008	10	1	10	ND	µg/Kg	R17247
1,2,4-Trimethylbenzene	SW8260B	9/8/2008	10	1	10	ND	µg/Kg	R17247
1,2-Dibromo-3-chloropropane	SW8260B	9/8/2008	10	1	10	ND	µg/Kg	R17247
1,2-Dibromoethane (EDB)	SW8260B	9/8/2008	10	1	10	ND	µg/Kg	R17247
1,2-Dichlorobenzene	SW8260B	9/8/2008	10	1	10	ND	µg/Kg	R17247
1,2-Dichloroethane (EDC)	SW8260B	9/8/2008	10	1	10	ND	µg/Kg	R17247
1,2-Dichloropropane	SW8260B	9/8/2008	10	1	10	ND	µg/Kg	R17247
1,3,5-Trimethylbenzene	SW8260B	9/8/2008	10	1	10	ND	µg/Kg	R17247
1,3-Dichlorobenzene	SW8260B	9/8/2008	10	1	10	ND	µg/Kg	R17247
1,4-Dichlorobenzene	SW8260B	9/8/2008	10	1	10	ND	µg/Kg	R17247
2,2-Dichloropropane	SW8260B	9/8/2008	10	1	10	ND	µg/Kg	R17247
2-Chloroethyl vinyl ether	SW8260B	9/8/2008	10	1	10	ND	µg/Kg	R17247
2-Chlorotoluene	SW8260B	9/8/2008	10	1	10	ND	µg/Kg	R17247
4-Chlorotoluene	SW8260B	9/8/2008	10	1	10	ND	µg/Kg	R17247
4-Isopropyltoluene	SW8260B	9/8/2008	10	1	10	ND	µg/Kg	R17247
Benzene	SW8260B	9/8/2008	10	1	10	ND	µg/Kg	R17247
Bromobenzene	SW8260B	9/8/2008	10	1	10	ND	µg/Kg	R17247
Bromochloromethane	SW8260B	9/8/2008	10	1	10	ND	µg/Kg	R17247
Bromodichloromethane	SW8260B	9/8/2008	10	1	10	ND	µg/Kg	R17247
Bromoform	SW8260B	9/8/2008	10	1	10	ND	µg/Kg	R17247
Bromomethane	SW8260B	9/8/2008	10	1	10	ND	µg/Kg	R17247
Carbon tetrachloride	SW8260B	9/8/2008	10	1	10	ND	µg/Kg	R17247
Chlorobenzene	SW8260B	9/8/2008	10	1	10	ND	µg/Kg	R17247
Chloroform	SW8260B	9/8/2008	10	1	10	ND	µg/Kg	R17247
Chloromethane	SW8260B	9/8/2008	10	1	10	ND	µg/Kg	R17247
cis-1,2-Dichloroethene	SW8260B	9/8/2008	10	1	10	ND	µg/Kg	R17247
cis-1,3-Dichloropropene	SW8260B	9/8/2008	10	1	10	ND	µg/Kg	R17247
Dibromochloromethane	SW8260B	9/8/2008	10	1	10	ND	µg/Kg	R17247
Dibromomethane	SW8260B	9/8/2008	10	1	10	ND	µg/Kg	R17247
Dichlorodifluoromethane	SW8260B	9/8/2008	10	1	10	ND	µg/Kg	R17247
Ethyl tert-butyl ether (ETBE)	SW8260B	9/8/2008	10	1	10	ND	µg/Kg	R17247
Ethylbenzene	SW8260B	9/8/2008	10	1	10	ND	µg/Kg	R17247
Freon-113	SW8260B	9/8/2008	10	1	10	ND	µg/Kg	R17247
Hexachlorobutadiene	SW8260B	9/8/2008	10	1	10	ND	µg/Kg	R17247

These analyses were performed according to State of California Environmental Laboratory Accreditation program, Certificate # 1991

Report prepared for: Charlie Almestad
KLEINFELDER

Date Received: 9/5/2008
Date Reported: 9/12/2008

Client Sample ID: MW-7-13
Sample Location: CTO
Sample Matrix: SOIL
Date/Time Sampled 9/3/2008 7:40:00 AM

Lab Sample ID: 0809020-001
Date Prepared: 9/8/2008

Parameters	Analysis Method	Date Analyzed	RL	Dilution Factor	MRL	Result	Units	Analytical Batch
Isopropyl Ether	SW8260B	9/8/2008	10	1	10	ND	µg/Kg	R17247
Isopropylbenzene	SW8260B	9/8/2008	10	1	10	ND	µg/Kg	R17247
Methyl tert-butyl ether (MTBE)	SW8260B	9/8/2008	10	1	10	ND	µg/Kg	R17247
Methylene chloride	SW8260B	9/8/2008	50	1	50	ND	µg/Kg	R17247
Naphthalene	SW8260B	9/8/2008	20	1	20	ND	µg/Kg	R17247
n-Butylbenzene	SW8260B	9/8/2008	10	1	10	ND	µg/Kg	R17247
n-Propylbenzene	SW8260B	9/8/2008	10	1	10	ND	µg/Kg	R17247
sec-Butylbenzene	SW8260B	9/8/2008	10	1	10	ND	µg/Kg	R17247
Styrene	SW8260B	9/8/2008	10	1	10	ND	µg/Kg	R17247
t-Butyl alcohol (t-Butanol)	SW8260B	9/8/2008	50	1	50	ND	µg/Kg	R17247
tert-Amyl methyl ether (TAME)	SW8260B	9/8/2008	10	1	10	ND	µg/Kg	R17247
tert-Butylbenzene	SW8260B	9/8/2008	10	1	10	ND	µg/Kg	R17247
Tetrachloroethene	SW8260B	9/8/2008	10	1	10	ND	µg/Kg	R17247
Toluene	SW8260B	9/8/2008	10	1	10	ND	µg/Kg	R17247
trans-1,2-Dichloroethene	SW8260B	9/8/2008	10	1	10	ND	µg/Kg	R17247
trans-1,3-Dichloropropene	SW8260B	9/8/2008	10	1	10	ND	µg/Kg	R17247
Trichloroethene	SW8260B	9/8/2008	10	1	10	ND	µg/Kg	R17247
Trichlorofluoromethane	SW8260B	9/8/2008	10	1	10	ND	µg/Kg	R17247
Vinyl chloride	SW8260B	9/8/2008	10	1	10	ND	µg/Kg	R17247
Xylenes, Total	SW8260B	9/8/2008	15	1	15	ND	µg/Kg	R17247
Surr: 4-Bromofluorobenzene	SW8260B	9/8/2008	0	1	55.8-141	83.4	%REC	R17247
Surr: Dibromofluoromethane	SW8260B	9/8/2008	0	1	59.8-148	125	%REC	R17247
Surr: Toluene-d8	SW8260B	9/8/2008	0	1	55.2-133	86.6	%REC	R17247
Total Organic Carbon	SW9060	9/5/2008	25	1	25	ND	mg/Kg	R17242

These analyses were performed according to State of California Environmental Laboratory Accreditation program, Certificate # 1991

Report prepared for: Charlie Almestad
KLEINFELDER

Date Received: 9/5/2008
Date Reported: 9/12/2008

Client Sample ID: MW-6-12
Sample Location: CTO
Sample Matrix: SOIL
Date/Time Sampled 9/3/2008 8:20:00 AM

Lab Sample ID: 0809020-002
Date Prepared: 9/8/2008

Parameters	Analysis Method	Date Analyzed	RL	Dilution Factor	MRL	Result	Units	Analytical Batch
TPH (Diesel-SG)	SW8015B	9/10/2008	2	1	2.00	ND	mg/Kg	R17278
Surr: Pentacosane	SW8015B	9/10/2008	0	1	61.5-133	86.5	%REC	R17278
TPH (Gasoline)	SW8015B	9/8/2008	0.1	1	0.100	ND	mg/Kg	R17253
Surr: Trifluorotoluene	SW8015B	9/8/2008	0	1	65-135	99.2	%REC	R17253

These analyses were performed according to State of California Environmental Laboratory Accreditation program, Certificate # 1991

Report prepared for: Charlie Almestad
KLEINFELDER

Date Received: 9/5/2008
Date Reported: 9/12/2008

Client Sample ID: MW-6-12
Sample Location: CTO
Sample Matrix: SOIL
Date/Time Sampled 9/3/2008 8:20:00 AM

Lab Sample ID: 0809020-002
Date Prepared: 9/8/2008

Parameters	Analysis Method	Date Analyzed	RL	Dilution Factor	MRL	Result	Units	Analytical Batch
1,1,1,2-Tetrachloroethane	SW8260B	9/8/2008	10	1	10	ND	µg/Kg	R17247
1,1,1-Trichloroethane	SW8260B	9/8/2008	10	1	10	ND	µg/Kg	R17247
1,1,2,2-Tetrachloroethane	SW8260B	9/8/2008	10	1	10	ND	µg/Kg	R17247
1,1,2-Trichloroethane	SW8260B	9/8/2008	10	1	10	ND	µg/Kg	R17247
1,1-Dichloroethane	SW8260B	9/8/2008	10	1	10	ND	µg/Kg	R17247
1,1-Dichloroethene	SW8260B	9/8/2008	10	1	10	ND	µg/Kg	R17247
1,1-Dichloropropene	SW8260B	9/8/2008	10	1	10	ND	µg/Kg	R17247
1,2,3-Trichlorobenzene	SW8260B	9/8/2008	10	1	10	ND	µg/Kg	R17247
1,2,3-Trichloropropane	SW8260B	9/8/2008	10	1	10	ND	µg/Kg	R17247
1,2,4-Trichlorobenzene	SW8260B	9/8/2008	10	1	10	ND	µg/Kg	R17247
1,2,4-Trimethylbenzene	SW8260B	9/8/2008	10	1	10	ND	µg/Kg	R17247
1,2-Dibromo-3-chloropropane	SW8260B	9/8/2008	10	1	10	ND	µg/Kg	R17247
1,2-Dibromoethane (EDB)	SW8260B	9/8/2008	10	1	10	ND	µg/Kg	R17247
1,2-Dichlorobenzene	SW8260B	9/8/2008	10	1	10	ND	µg/Kg	R17247
1,2-Dichloroethane (EDC)	SW8260B	9/8/2008	10	1	10	ND	µg/Kg	R17247
1,2-Dichloropropane	SW8260B	9/8/2008	10	1	10	ND	µg/Kg	R17247
1,3,5-Trimethylbenzene	SW8260B	9/8/2008	10	1	10	ND	µg/Kg	R17247
1,3-Dichlorobenzene	SW8260B	9/8/2008	10	1	10	ND	µg/Kg	R17247
1,4-Dichlorobenzene	SW8260B	9/8/2008	10	1	10	ND	µg/Kg	R17247
2,2-Dichloropropane	SW8260B	9/8/2008	10	1	10	ND	µg/Kg	R17247
2-Chloroethyl vinyl ether	SW8260B	9/8/2008	10	1	10	ND	µg/Kg	R17247
2-Chlorotoluene	SW8260B	9/8/2008	10	1	10	ND	µg/Kg	R17247
4-Chlorotoluene	SW8260B	9/8/2008	10	1	10	ND	µg/Kg	R17247
4-Isopropyltoluene	SW8260B	9/8/2008	10	1	10	ND	µg/Kg	R17247
Benzene	SW8260B	9/8/2008	10	1	10	ND	µg/Kg	R17247
Bromobenzene	SW8260B	9/8/2008	10	1	10	ND	µg/Kg	R17247
Bromochloromethane	SW8260B	9/8/2008	10	1	10	ND	µg/Kg	R17247
Bromodichloromethane	SW8260B	9/8/2008	10	1	10	ND	µg/Kg	R17247
Bromoform	SW8260B	9/8/2008	10	1	10	ND	µg/Kg	R17247
Bromomethane	SW8260B	9/8/2008	10	1	10	ND	µg/Kg	R17247
Carbon tetrachloride	SW8260B	9/8/2008	10	1	10	ND	µg/Kg	R17247
Chlorobenzene	SW8260B	9/8/2008	10	1	10	ND	µg/Kg	R17247
Chloroform	SW8260B	9/8/2008	10	1	10	ND	µg/Kg	R17247
Chloromethane	SW8260B	9/8/2008	10	1	10	ND	µg/Kg	R17247
cis-1,2-Dichloroethene	SW8260B	9/8/2008	10	1	10	ND	µg/Kg	R17247
cis-1,3-Dichloropropene	SW8260B	9/8/2008	10	1	10	ND	µg/Kg	R17247
Dibromochloromethane	SW8260B	9/8/2008	10	1	10	ND	µg/Kg	R17247
Dibromomethane	SW8260B	9/8/2008	10	1	10	ND	µg/Kg	R17247
Dichlorodifluoromethane	SW8260B	9/8/2008	10	1	10	ND	µg/Kg	R17247
Ethyl tert-butyl ether (ETBE)	SW8260B	9/8/2008	10	1	10	ND	µg/Kg	R17247
Ethylbenzene	SW8260B	9/8/2008	10	1	10	ND	µg/Kg	R17247
Freon-113	SW8260B	9/8/2008	10	1	10	ND	µg/Kg	R17247
Hexachlorobutadiene	SW8260B	9/8/2008	10	1	10	ND	µg/Kg	R17247

These analyses were performed according to State of California Environmental Laboratory Accreditation program, Certificate # 1991

Report prepared for: Charlie Almestad
KLEINFELDER

Date Received: 9/5/2008
Date Reported: 9/12/2008

Client Sample ID: MW-6-12
Sample Location: CTO
Sample Matrix: SOIL
Date/Time Sampled 9/3/2008 8:20:00 AM

Lab Sample ID: 0809020-002
Date Prepared: 9/8/2008

Parameters	Analysis Method	Date Analyzed	RL	Dilution Factor	MRL	Result	Units	Analytical Batch
Isopropyl Ether	SW8260B	9/8/2008	10	1	10	ND	µg/Kg	R17247
Isopropylbenzene	SW8260B	9/8/2008	10	1	10	ND	µg/Kg	R17247
Methyl tert-butyl ether (MTBE)	SW8260B	9/8/2008	10	1	10	ND	µg/Kg	R17247
Methylene chloride	SW8260B	9/8/2008	50	1	50	ND	µg/Kg	R17247
Naphthalene	SW8260B	9/8/2008	20	1	20	ND	µg/Kg	R17247
n-Butylbenzene	SW8260B	9/8/2008	10	1	10	ND	µg/Kg	R17247
n-Propylbenzene	SW8260B	9/8/2008	10	1	10	ND	µg/Kg	R17247
sec-Butylbenzene	SW8260B	9/8/2008	10	1	10	ND	µg/Kg	R17247
Styrene	SW8260B	9/8/2008	10	1	10	ND	µg/Kg	R17247
t-Butyl alcohol (t-Butanol)	SW8260B	9/8/2008	50	1	50	ND	µg/Kg	R17247
tert-Amyl methyl ether (TAME)	SW8260B	9/8/2008	10	1	10	ND	µg/Kg	R17247
tert-Butylbenzene	SW8260B	9/8/2008	10	1	10	ND	µg/Kg	R17247
Tetrachloroethene	SW8260B	9/8/2008	10	1	10	ND	µg/Kg	R17247
Toluene	SW8260B	9/8/2008	10	1	10	ND	µg/Kg	R17247
trans-1,2-Dichloroethene	SW8260B	9/8/2008	10	1	10	ND	µg/Kg	R17247
trans-1,3-Dichloropropene	SW8260B	9/8/2008	10	1	10	ND	µg/Kg	R17247
Trichloroethene	SW8260B	9/8/2008	10	1	10	ND	µg/Kg	R17247
Trichlorofluoromethane	SW8260B	9/8/2008	10	1	10	ND	µg/Kg	R17247
Vinyl chloride	SW8260B	9/8/2008	10	1	10	ND	µg/Kg	R17247
Xylenes, Total	SW8260B	9/8/2008	15	1	15	ND	µg/Kg	R17247
Surr: 4-Bromofluorobenzene	SW8260B	9/8/2008	0	1	55.8-141	92.1	%REC	R17247
Surr: Dibromofluoromethane	SW8260B	9/8/2008	0	1	59.8-148	131	%REC	R17247
Surr: Toluene-d8	SW8260B	9/8/2008	0	1	55.2-133	84.5	%REC	R17247
Total Organic Carbon	SW9060	9/5/2008	25	1	25	ND	mg/Kg	R17242

These analyses were performed according to State of California Environmental Laboratory Accreditation program, Certificate # 1991

Report prepared for: Charlie Almestad
KLEINFELDER

Date Received: 9/5/2008
Date Reported: 9/12/2008

Client Sample ID: MW-4-14
Sample Location: CTO
Sample Matrix: SOIL
Date/Time Sampled 9/3/2008 11:55:00 AM

Lab Sample ID: 0809020-003
Date Prepared: 9/8/2008

Parameters	Analysis Method	Date Analyzed	RL	Dilution Factor	MRL	Result	Units	Analytical Batch
TPH (Diesel-SG)	SW8015B	9/10/2008	2	1	2.00	ND	mg/Kg	R17278
Surr: Pentacosane	SW8015B	9/10/2008	0	1	61.5-133	92.2	%REC	R17278
TPH (Gasoline)	SW8015B	9/8/2008	0.1	1	0.100	ND	mg/Kg	R17253
Surr: Trifluorotoluene	SW8015B	9/8/2008	0	1	65-135	105	%REC	R17253

These analyses were performed according to State of California Environmental Laboratory Accreditation program, Certificate # 1991

Report prepared for: Charlie Almestad
KLEINFELDER

Date Received: 9/5/2008
Date Reported: 9/12/2008

Client Sample ID: MW-4-14
Sample Location: CTO
Sample Matrix: SOIL
Date/Time Sampled 9/3/2008 11:55:00 AM

Lab Sample ID: 0809020-003
Date Prepared: 9/8/2008

Parameters	Analysis Method	Date Analyzed	RL	Dilution Factor	MRL	Result	Units	Analytical Batch
1,1,1,2-Tetrachloroethane	SW8260B	9/8/2008	10	1	10	ND	µg/Kg	R17247
1,1,1-Trichloroethane	SW8260B	9/8/2008	10	1	10	ND	µg/Kg	R17247
1,1,2,2-Tetrachloroethane	SW8260B	9/8/2008	10	1	10	ND	µg/Kg	R17247
1,1,2-Trichloroethane	SW8260B	9/8/2008	10	1	10	ND	µg/Kg	R17247
1,1-Dichloroethane	SW8260B	9/8/2008	10	1	10	ND	µg/Kg	R17247
1,1-Dichloroethene	SW8260B	9/8/2008	10	1	10	ND	µg/Kg	R17247
1,1-Dichloropropene	SW8260B	9/8/2008	10	1	10	ND	µg/Kg	R17247
1,2,3-Trichlorobenzene	SW8260B	9/8/2008	10	1	10	ND	µg/Kg	R17247
1,2,3-Trichloropropane	SW8260B	9/8/2008	10	1	10	ND	µg/Kg	R17247
1,2,4-Trichlorobenzene	SW8260B	9/8/2008	10	1	10	ND	µg/Kg	R17247
1,2,4-Trimethylbenzene	SW8260B	9/8/2008	10	1	10	ND	µg/Kg	R17247
1,2-Dibromo-3-chloropropane	SW8260B	9/8/2008	10	1	10	ND	µg/Kg	R17247
1,2-Dibromoethane (EDB)	SW8260B	9/8/2008	10	1	10	ND	µg/Kg	R17247
1,2-Dichlorobenzene	SW8260B	9/8/2008	10	1	10	ND	µg/Kg	R17247
1,2-Dichloroethane (EDC)	SW8260B	9/8/2008	10	1	10	ND	µg/Kg	R17247
1,2-Dichloropropane	SW8260B	9/8/2008	10	1	10	ND	µg/Kg	R17247
1,3,5-Trimethylbenzene	SW8260B	9/8/2008	10	1	10	ND	µg/Kg	R17247
1,3-Dichlorobenzene	SW8260B	9/8/2008	10	1	10	ND	µg/Kg	R17247
1,4-Dichlorobenzene	SW8260B	9/8/2008	10	1	10	ND	µg/Kg	R17247
2,2-Dichloropropane	SW8260B	9/8/2008	10	1	10	ND	µg/Kg	R17247
2-Chloroethyl vinyl ether	SW8260B	9/8/2008	10	1	10	ND	µg/Kg	R17247
2-Chlorotoluene	SW8260B	9/8/2008	10	1	10	ND	µg/Kg	R17247
4-Chlorotoluene	SW8260B	9/8/2008	10	1	10	ND	µg/Kg	R17247
4-Isopropyltoluene	SW8260B	9/8/2008	10	1	10	ND	µg/Kg	R17247
Benzene	SW8260B	9/8/2008	10	1	10	ND	µg/Kg	R17247
Bromobenzene	SW8260B	9/8/2008	10	1	10	ND	µg/Kg	R17247
Bromochloromethane	SW8260B	9/8/2008	10	1	10	ND	µg/Kg	R17247
Bromodichloromethane	SW8260B	9/8/2008	10	1	10	ND	µg/Kg	R17247
Bromoform	SW8260B	9/8/2008	10	1	10	ND	µg/Kg	R17247
Bromomethane	SW8260B	9/8/2008	10	1	10	ND	µg/Kg	R17247
Carbon tetrachloride	SW8260B	9/8/2008	10	1	10	ND	µg/Kg	R17247
Chlorobenzene	SW8260B	9/8/2008	10	1	10	ND	µg/Kg	R17247
Chloroform	SW8260B	9/8/2008	10	1	10	ND	µg/Kg	R17247
Chloromethane	SW8260B	9/8/2008	10	1	10	ND	µg/Kg	R17247
cis-1,2-Dichloroethene	SW8260B	9/8/2008	10	1	10	ND	µg/Kg	R17247
cis-1,3-Dichloropropene	SW8260B	9/8/2008	10	1	10	ND	µg/Kg	R17247
Dibromochloromethane	SW8260B	9/8/2008	10	1	10	ND	µg/Kg	R17247
Dibromomethane	SW8260B	9/8/2008	10	1	10	ND	µg/Kg	R17247
Dichlorodifluoromethane	SW8260B	9/8/2008	10	1	10	ND	µg/Kg	R17247
Ethyl tert-butyl ether (ETBE)	SW8260B	9/8/2008	10	1	10	ND	µg/Kg	R17247
Ethylbenzene	SW8260B	9/8/2008	10	1	10	ND	µg/Kg	R17247
Freon-113	SW8260B	9/8/2008	10	1	10	ND	µg/Kg	R17247
Hexachlorobutadiene	SW8260B	9/8/2008	10	1	10	ND	µg/Kg	R17247

These analyses were performed according to State of California Environmental Laboratory Accreditation program, Certificate # 1991

Report prepared for: Charlie Almestad
KLEINFELDER

Date Received: 9/5/2008
Date Reported: 9/12/2008

Client Sample ID: MW-4-14
Sample Location: CTO
Sample Matrix: SOIL
Date/Time Sampled 9/3/2008 11:55:00 AM

Lab Sample ID: 0809020-003
Date Prepared: 9/8/2008

Parameters	Analysis Method	Date Analyzed	RL	Dilution Factor	MRL	Result	Units	Analytical Batch
Isopropyl Ether	SW8260B	9/8/2008	10	1	10	ND	µg/Kg	R17247
Isopropylbenzene	SW8260B	9/8/2008	10	1	10	ND	µg/Kg	R17247
Methyl tert-butyl ether (MTBE)	SW8260B	9/8/2008	10	1	10	ND	µg/Kg	R17247
Methylene chloride	SW8260B	9/8/2008	50	1	50	ND	µg/Kg	R17247
Naphthalene	SW8260B	9/8/2008	20	1	20	ND	µg/Kg	R17247
n-Butylbenzene	SW8260B	9/8/2008	10	1	10	ND	µg/Kg	R17247
n-Propylbenzene	SW8260B	9/8/2008	10	1	10	ND	µg/Kg	R17247
sec-Butylbenzene	SW8260B	9/8/2008	10	1	10	ND	µg/Kg	R17247
Styrene	SW8260B	9/8/2008	10	1	10	ND	µg/Kg	R17247
t-Butyl alcohol (t-Butanol)	SW8260B	9/8/2008	50	1	50	ND	µg/Kg	R17247
tert-Amyl methyl ether (TAME)	SW8260B	9/8/2008	10	1	10	ND	µg/Kg	R17247
tert-Butylbenzene	SW8260B	9/8/2008	10	1	10	ND	µg/Kg	R17247
Tetrachloroethene	SW8260B	9/8/2008	10	1	10	ND	µg/Kg	R17247
Toluene	SW8260B	9/8/2008	10	1	10	ND	µg/Kg	R17247
trans-1,2-Dichloroethene	SW8260B	9/8/2008	10	1	10	ND	µg/Kg	R17247
trans-1,3-Dichloropropene	SW8260B	9/8/2008	10	1	10	ND	µg/Kg	R17247
Trichloroethene	SW8260B	9/8/2008	10	1	10	ND	µg/Kg	R17247
Trichlorofluoromethane	SW8260B	9/8/2008	10	1	10	ND	µg/Kg	R17247
Vinyl chloride	SW8260B	9/8/2008	10	1	10	ND	µg/Kg	R17247
Xylenes, Total	SW8260B	9/8/2008	15	1	15	ND	µg/Kg	R17247
Surr: 4-Bromofluorobenzene	SW8260B	9/8/2008	0	1	55.8-141	101	%REC	R17247
Surr: Dibromofluoromethane	SW8260B	9/8/2008	0	1	59.8-148	131	%REC	R17247
Surr: Toluene-d8	SW8260B	9/8/2008	0	1	55.2-133	85.7	%REC	R17247
Total Organic Carbon	SW9060	9/5/2008	25	1	25	ND	mg/Kg	R17242

These analyses were performed according to State of California Environmental Laboratory Accreditation program, Certificate # 1991

Report prepared for: Charlie Almestad
KLEINFELDER

Date Received: 9/5/2008
Date Reported: 9/12/2008

Client Sample ID: DP-5-6
Sample Location: CTO
Sample Matrix: SOIL
Date/Time Sampled 9/3/2008 2:05:00 PM

Lab Sample ID: 0809020-004
Date Prepared: 9/8/2008

Parameters	Analysis Method	Date Analyzed	RL	Dilution Factor	MRL	Result	Units	Analytical Batch
TPH (Diesel-SG)	SW8015B	9/10/2008	2	1	2.00	ND	mg/Kg	R17278
Surr: Pentacosane	SW8015B	9/10/2008	0	1	61.5-133	85.3	%REC	R17278
TPH (Gasoline)	SW8015B	9/8/2008	0.1	1	0.100	ND	mg/Kg	R17253
Surr: Trifluorotoluene	SW8015B	9/8/2008	0	1	65-135	99.7	%REC	R17253

These analyses were performed according to State of California Environmental Laboratory Accreditation program, Certificate # 1991

Report prepared for: Charlie Almestad
KLEINFELDER

Date Received: 9/5/2008
Date Reported: 9/12/2008

Client Sample ID: DP-5-6
Sample Location: CTO
Sample Matrix: SOIL
Date/Time Sampled 9/3/2008 2:05:00 PM

Lab Sample ID: 0809020-004
Date Prepared: 9/8/2008

Parameters	Analysis Method	Date Analyzed	RL	Dilution Factor	MRL	Result	Units	Analytical Batch
1,1,1,2-Tetrachloroethane	SW8260B	9/8/2008	10	1	10	ND	µg/Kg	R17247
1,1,1-Trichloroethane	SW8260B	9/8/2008	10	1	10	ND	µg/Kg	R17247
1,1,2,2-Tetrachloroethane	SW8260B	9/8/2008	10	1	10	ND	µg/Kg	R17247
1,1,2-Trichloroethane	SW8260B	9/8/2008	10	1	10	ND	µg/Kg	R17247
1,1-Dichloroethane	SW8260B	9/8/2008	10	1	10	ND	µg/Kg	R17247
1,1-Dichloroethene	SW8260B	9/8/2008	10	1	10	ND	µg/Kg	R17247
1,1-Dichloropropene	SW8260B	9/8/2008	10	1	10	ND	µg/Kg	R17247
1,2,3-Trichlorobenzene	SW8260B	9/8/2008	10	1	10	ND	µg/Kg	R17247
1,2,3-Trichloropropane	SW8260B	9/8/2008	10	1	10	ND	µg/Kg	R17247
1,2,4-Trichlorobenzene	SW8260B	9/8/2008	10	1	10	ND	µg/Kg	R17247
1,2,4-Trimethylbenzene	SW8260B	9/8/2008	10	1	10	ND	µg/Kg	R17247
1,2-Dibromo-3-chloropropane	SW8260B	9/8/2008	10	1	10	ND	µg/Kg	R17247
1,2-Dibromoethane (EDB)	SW8260B	9/8/2008	10	1	10	ND	µg/Kg	R17247
1,2-Dichlorobenzene	SW8260B	9/8/2008	10	1	10	ND	µg/Kg	R17247
1,2-Dichloroethane (EDC)	SW8260B	9/8/2008	10	1	10	ND	µg/Kg	R17247
1,2-Dichloropropane	SW8260B	9/8/2008	10	1	10	ND	µg/Kg	R17247
1,3,5-Trimethylbenzene	SW8260B	9/8/2008	10	1	10	ND	µg/Kg	R17247
1,3-Dichlorobenzene	SW8260B	9/8/2008	10	1	10	ND	µg/Kg	R17247
1,4-Dichlorobenzene	SW8260B	9/8/2008	10	1	10	ND	µg/Kg	R17247
2,2-Dichloropropane	SW8260B	9/8/2008	10	1	10	ND	µg/Kg	R17247
2-Chloroethyl vinyl ether	SW8260B	9/8/2008	10	1	10	ND	µg/Kg	R17247
2-Chlorotoluene	SW8260B	9/8/2008	10	1	10	ND	µg/Kg	R17247
4-Chlorotoluene	SW8260B	9/8/2008	10	1	10	ND	µg/Kg	R17247
4-Isopropyltoluene	SW8260B	9/8/2008	10	1	10	ND	µg/Kg	R17247
Benzene	SW8260B	9/8/2008	10	1	10	ND	µg/Kg	R17247
Bromobenzene	SW8260B	9/8/2008	10	1	10	ND	µg/Kg	R17247
Bromochloromethane	SW8260B	9/8/2008	10	1	10	ND	µg/Kg	R17247
Bromodichloromethane	SW8260B	9/8/2008	10	1	10	ND	µg/Kg	R17247
Bromoform	SW8260B	9/8/2008	10	1	10	ND	µg/Kg	R17247
Bromomethane	SW8260B	9/8/2008	10	1	10	ND	µg/Kg	R17247
Carbon tetrachloride	SW8260B	9/8/2008	10	1	10	ND	µg/Kg	R17247
Chlorobenzene	SW8260B	9/8/2008	10	1	10	ND	µg/Kg	R17247
Chloroform	SW8260B	9/8/2008	10	1	10	ND	µg/Kg	R17247
Chloromethane	SW8260B	9/8/2008	10	1	10	ND	µg/Kg	R17247
cis-1,2-Dichloroethene	SW8260B	9/8/2008	10	1	10	ND	µg/Kg	R17247
cis-1,3-Dichloropropene	SW8260B	9/8/2008	10	1	10	ND	µg/Kg	R17247
Dibromochloromethane	SW8260B	9/8/2008	10	1	10	ND	µg/Kg	R17247
Dibromomethane	SW8260B	9/8/2008	10	1	10	ND	µg/Kg	R17247
Dichlorodifluoromethane	SW8260B	9/8/2008	10	1	10	ND	µg/Kg	R17247
Ethyl tert-butyl ether (ETBE)	SW8260B	9/8/2008	10	1	10	ND	µg/Kg	R17247
Ethylbenzene	SW8260B	9/8/2008	10	1	10	ND	µg/Kg	R17247
Freon-113	SW8260B	9/8/2008	10	1	10	ND	µg/Kg	R17247
Hexachlorobutadiene	SW8260B	9/8/2008	10	1	10	ND	µg/Kg	R17247

These analyses were performed according to State of California Environmental Laboratory Accreditation program, Certificate # 1991

Report prepared for: Charlie Almestad
KLEINFELDER

Date Received: 9/5/2008
Date Reported: 9/12/2008

Client Sample ID: DP-5-6
Sample Location: CTO
Sample Matrix: SOIL
Date/Time Sampled 9/3/2008 2:05:00 PM

Lab Sample ID: 0809020-004
Date Prepared: 9/8/2008

Parameters	Analysis Method	Date Analyzed	RL	Dilution Factor	MRL	Result	Units	Analytical Batch
Isopropyl Ether	SW8260B	9/8/2008	10	1	10	ND	µg/Kg	R17247
Isopropylbenzene	SW8260B	9/8/2008	10	1	10	ND	µg/Kg	R17247
Methyl tert-butyl ether (MTBE)	SW8260B	9/8/2008	10	1	10	ND	µg/Kg	R17247
Methylene chloride	SW8260B	9/8/2008	50	1	50	ND	µg/Kg	R17247
Naphthalene	SW8260B	9/8/2008	20	1	20	ND	µg/Kg	R17247
n-Butylbenzene	SW8260B	9/8/2008	10	1	10	ND	µg/Kg	R17247
n-Propylbenzene	SW8260B	9/8/2008	10	1	10	ND	µg/Kg	R17247
sec-Butylbenzene	SW8260B	9/8/2008	10	1	10	ND	µg/Kg	R17247
Styrene	SW8260B	9/8/2008	10	1	10	ND	µg/Kg	R17247
t-Butyl alcohol (t-Butanol)	SW8260B	9/8/2008	50	1	50	ND	µg/Kg	R17247
tert-Amyl methyl ether (TAME)	SW8260B	9/8/2008	10	1	10	ND	µg/Kg	R17247
tert-Butylbenzene	SW8260B	9/8/2008	10	1	10	ND	µg/Kg	R17247
Tetrachloroethene	SW8260B	9/8/2008	10	1	10	ND	µg/Kg	R17247
Toluene	SW8260B	9/8/2008	10	1	10	ND	µg/Kg	R17247
trans-1,2-Dichloroethene	SW8260B	9/8/2008	10	1	10	ND	µg/Kg	R17247
trans-1,3-Dichloropropene	SW8260B	9/8/2008	10	1	10	ND	µg/Kg	R17247
Trichloroethene	SW8260B	9/8/2008	10	1	10	ND	µg/Kg	R17247
Trichlorofluoromethane	SW8260B	9/8/2008	10	1	10	ND	µg/Kg	R17247
Vinyl chloride	SW8260B	9/8/2008	10	1	10	ND	µg/Kg	R17247
Xylenes, Total	SW8260B	9/8/2008	15	1	15	ND	µg/Kg	R17247
Surr: 4-Bromofluorobenzene	SW8260B	9/8/2008	0	1	55.8-141	93.9	%REC	R17247
Surr: Dibromofluoromethane	SW8260B	9/8/2008	0	1	59.8-148	126	%REC	R17247
Surr: Toluene-d8	SW8260B	9/8/2008	0	1	55.2-133	88.7	%REC	R17247
Total Organic Carbon	SW9060	9/5/2008	25	1	25	ND	mg/Kg	R17242

These analyses were performed according to State of California Environmental Laboratory Accreditation program, Certificate # 1991

Report prepared for: Charlie Almestad
KLEINFELDER

Date Received: 9/5/2008
Date Reported: 9/12/2008

Client Sample ID: DP-5-12
Sample Location: CTO
Sample Matrix: SOIL
Date/Time Sampled 9/3/2008 2:10:00 PM

Lab Sample ID: 0809020-005
Date Prepared: 9/8/2008

Parameters	Analysis Method	Date Analyzed	RL	Dilution Factor	MRL	Result	Units	Analytical Batch
TPH (Diesel-SG)	SW8015B	9/10/2008	2	10	20.0	588x	mg/Kg	R17278
Surr: Pentacosane	SW8015B	9/10/2008	0	10	61.5-133	88.2	%REC	R17278

Note: x- Sample chromatogram does not resemble typical diesel pattern (possibly two fuels present; one fuel lighter than diesel and the other fuel being diesel) . Hydrocarbons within the diesel range quantitated as diesel.

TPH (Gasoline)	SW8015B	9/8/2008	0.1	5	0.500	1300E	mg/Kg	R17253
Surr: Trifluorotoluene	SW8015B	9/8/2008	0	5	65-135	1900 S	%REC	R17253

Note:S- Outlying surrogate recovery observed. A duplicate analysis was performed with similar result indicated a matrix effect. E- Estimated value. The amount exceeds the calibration range but within linear working range of the instrument.

These analyses were performed according to State of California Environmental Laboratory Accreditation program, Certificate # 1991

Report prepared for: Charlie Almestad
KLEINFELDER

Date Received: 9/5/2008
Date Reported: 9/12/2008

Client Sample ID: DP-5-12
Sample Location: CTO
Sample Matrix: SOIL
Date/Time Sampled 9/3/2008 2:10:00 PM

Lab Sample ID: 0809020-005
Date Prepared: 9/8/2008

Parameters	Analysis Method	Date Analyzed	RL	Dilution Factor	MRL	Result	Units	Analytical Batch
1,1,1,2-Tetrachloroethane	SW8260B	9/9/2008	10	2000	20000	ND	µg/Kg	R17247
1,1,1-Trichloroethane	SW8260B	9/9/2008	10	2000	20000	ND	µg/Kg	R17247
1,1,2,2-Tetrachloroethane	SW8260B	9/9/2008	10	2000	20000	ND	µg/Kg	R17247
1,1,2-Trichloroethane	SW8260B	9/9/2008	10	2000	20000	ND	µg/Kg	R17247
1,1-Dichloroethane	SW8260B	9/9/2008	10	2000	20000	ND	µg/Kg	R17247
1,1-Dichloroethene	SW8260B	9/9/2008	10	2000	20000	ND	µg/Kg	R17247
1,1-Dichloropropene	SW8260B	9/9/2008	10	2000	20000	ND	µg/Kg	R17247
1,2,3-Trichlorobenzene	SW8260B	9/9/2008	10	2000	20000	ND	µg/Kg	R17247
1,2,3-Trichloropropane	SW8260B	9/9/2008	10	2000	20000	ND	µg/Kg	R17247
1,2,4-Trichlorobenzene	SW8260B	9/9/2008	10	2000	20000	ND	µg/Kg	R17247
1,2,4-Trimethylbenzene	SW8260B	9/9/2008	10	2000	20000	470000	µg/Kg	R17247
1,2-Dibromo-3-chloropropane	SW8260B	9/9/2008	10	2000	20000	ND	µg/Kg	R17247
1,2-Dibromoethane (EDB)	SW8260B	9/9/2008	10	2000	20000	ND	µg/Kg	R17247
1,2-Dichlorobenzene	SW8260B	9/9/2008	10	2000	20000	ND	µg/Kg	R17247
1,2-Dichloroethane (EDC)	SW8260B	9/9/2008	10	2000	20000	ND	µg/Kg	R17247
1,2-Dichloropropane	SW8260B	9/9/2008	10	2000	20000	ND	µg/Kg	R17247
1,3,5-Trimethylbenzene	SW8260B	9/9/2008	10	2000	20000	140000	µg/Kg	R17247
1,3-Dichlorobenzene	SW8260B	9/9/2008	10	2000	20000	ND	µg/Kg	R17247
1,4-Dichlorobenzene	SW8260B	9/9/2008	10	2000	20000	ND	µg/Kg	R17247
2,2-Dichloropropane	SW8260B	9/9/2008	10	2000	20000	ND	µg/Kg	R17247
2-Chloroethyl vinyl ether	SW8260B	9/9/2008	10	2000	20000	ND	µg/Kg	R17247
2-Chlorotoluene	SW8260B	9/9/2008	10	2000	20000	ND	µg/Kg	R17247
4-Chlorotoluene	SW8260B	9/9/2008	10	2000	20000	ND	µg/Kg	R17247
4-Isopropyltoluene	SW8260B	9/9/2008	10	2000	20000	ND	µg/Kg	R17247
Benzene	SW8260B	9/9/2008	10	2000	20000	ND	µg/Kg	R17247
Bromobenzene	SW8260B	9/9/2008	10	2000	20000	ND	µg/Kg	R17247
Bromochloromethane	SW8260B	9/9/2008	10	2000	20000	ND	µg/Kg	R17247
Bromodichloromethane	SW8260B	9/9/2008	10	2000	20000	ND	µg/Kg	R17247
Bromoform	SW8260B	9/9/2008	10	2000	20000	ND	µg/Kg	R17247
Bromomethane	SW8260B	9/9/2008	10	2000	20000	ND	µg/Kg	R17247
Carbon tetrachloride	SW8260B	9/9/2008	10	2000	20000	ND	µg/Kg	R17247
Chlorobenzene	SW8260B	9/9/2008	10	2000	20000	ND	µg/Kg	R17247
Chloroform	SW8260B	9/9/2008	10	2000	20000	ND	µg/Kg	R17247
Chloromethane	SW8260B	9/9/2008	10	2000	20000	ND	µg/Kg	R17247
cis-1,2-Dichloroethene	SW8260B	9/9/2008	10	2000	20000	ND	µg/Kg	R17247
cis-1,3-Dichloropropene	SW8260B	9/9/2008	10	2000	20000	ND	µg/Kg	R17247
Dibromochloromethane	SW8260B	9/9/2008	10	2000	20000	ND	µg/Kg	R17247
Dibromomethane	SW8260B	9/9/2008	10	2000	20000	ND	µg/Kg	R17247
Dichlorodifluoromethane	SW8260B	9/9/2008	10	2000	20000	ND	µg/Kg	R17247
Ethyl tert-butyl ether (ETBE)	SW8260B	9/9/2008	10	2000	20000	ND	µg/Kg	R17247
Ethylbenzene	SW8260B	9/9/2008	10	2000	20000	97000	µg/Kg	R17247
Freon-113	SW8260B	9/9/2008	10	2000	20000	ND	µg/Kg	R17247
Hexachlorobutadiene	SW8260B	9/9/2008	10	2000	20000	ND	µg/Kg	R17247

These analyses were performed according to State of California Environmental Laboratory Accreditation program, Certificate # 1991

Report prepared for: Charlie Almestad
KLEINFELDER

Date Received: 9/5/2008
Date Reported: 9/12/2008

Client Sample ID: DP-5-12
Sample Location: CTO
Sample Matrix: SOIL
Date/Time Sampled 9/3/2008 2:10:00 PM

Lab Sample ID: 0809020-005
Date Prepared: 9/8/2008

Parameters	Analysis Method	Date Analyzed	RL	Dilution Factor	MRL	Result	Units	Analytical Batch
Isopropyl Ether	SW8260B	9/9/2008	10	2000	20000	ND	µg/Kg	R17247
Isopropylbenzene	SW8260B	9/9/2008	10	2000	20000	ND	µg/Kg	R17247
Methyl tert-butyl ether (MTBE)	SW8260B	9/9/2008	10	2000	20000	ND	µg/Kg	R17247
Methylene chloride	SW8260B	9/9/2008	50	2000	100000	ND	µg/Kg	R17247
Naphthalene	SW8260B	9/9/2008	20	2000	40000	140000	µg/Kg	R17247
n-Butylbenzene	SW8260B	9/9/2008	10	2000	20000	35000	µg/Kg	R17247
n-Propylbenzene	SW8260B	9/9/2008	10	2000	20000	53000	µg/Kg	R17247
sec-Butylbenzene	SW8260B	9/9/2008	10	2000	20000	ND	µg/Kg	R17247
Styrene	SW8260B	9/9/2008	10	2000	20000	ND	µg/Kg	R17247
t-Butyl alcohol (t-Butanol)	SW8260B	9/9/2008	50	2000	100000	ND	µg/Kg	R17247
tert-Amyl methyl ether (TAME)	SW8260B	9/9/2008	10	2000	20000	ND	µg/Kg	R17247
tert-Butylbenzene	SW8260B	9/9/2008	10	2000	20000	ND	µg/Kg	R17247
Tetrachloroethene	SW8260B	9/9/2008	10	2000	20000	ND	µg/Kg	R17247
Toluene	SW8260B	9/9/2008	10	2000	20000	ND	µg/Kg	R17247
trans-1,2-Dichloroethene	SW8260B	9/9/2008	10	2000	20000	ND	µg/Kg	R17247
trans-1,3-Dichloropropene	SW8260B	9/9/2008	10	2000	20000	ND	µg/Kg	R17247
Trichloroethene	SW8260B	9/9/2008	10	2000	20000	ND	µg/Kg	R17247
Trichlorofluoromethane	SW8260B	9/9/2008	10	2000	20000	ND	µg/Kg	R17247
Vinyl chloride	SW8260B	9/9/2008	10	2000	20000	ND	µg/Kg	R17247
Xylenes, Total	SW8260B	9/9/2008	15	2000	30000	500000	µg/Kg	R17247
Surr: 4-Bromofluorobenzene	SW8260B	9/9/2008	0	2000	55.8-141	90.2	%REC	R17247
Surr: Dibromofluoromethane	SW8260B	9/9/2008	0	2000	59.8-148	130	%REC	R17247
Surr: Toluene-d8	SW8260B	9/9/2008	0	2000	55.2-133	108	%REC	R17247
Total Organic Carbon	SW9060	9/5/2008	25	1	25	ND	mg/Kg	R17242

These analyses were performed according to State of California Environmental Laboratory Accreditation program, Certificate # 1991

Report prepared for: Charlie Almestad
KLEINFELDER

Date Received: 9/5/2008
Date Reported: 9/12/2008

Client Sample ID: DP-5-W
Sample Location: CTO
Sample Matrix: WATER
Date/Time Sampled 9/3/2008 2:30:00 PM

Lab Sample ID: 0809020-006
Date Prepared: 9/8/2008

Parameters	Analysis Method	Date Analyzed	RL	Dilution Factor	MRL	Result	Units	Analytical Batch
TPH (Diesel-SG)	SW8015B	9/8/2008	0.1	1	0.159	2.41x	mg/L	R17251
Surr: Pentacosane	SW8015B	9/8/2008	0	1	64.2-123	88.0	%REC	R17251

Note: x- Sample chromatogram does not resemble typical diesel pattern (possibly fuel lighter than diesel). Lighter end hydrocarbons within the diesel range quantitated as diesel.

TPH (Gasoline)	SW8015B	9/10/2008	0.05	8.8	0.440	11.9	mg/L	R17258
Surr: Trifluorotoluene	SW8015B	9/10/2008	0	8.8	65-135	77.7	%REC	R17258

These analyses were performed according to State of California Environmental Laboratory Accreditation program, Certificate # 1991

Report prepared for: Charlie Almestad
KLEINFELDER

Date Received: 9/5/2008
Date Reported: 9/12/2008

Client Sample ID: DP-5-W
Sample Location: CTO
Sample Matrix: WATER
Date/Time Sampled 9/3/2008 2:30:00 PM

Lab Sample ID: 0809020-006
Date Prepared: 9/8/2008

Parameters	Analysis Method	Date Analyzed	RL	Dilution Factor	MRL	Result	Units	Analytical Batch
1,1,1,2-Tetrachloroethane	SW8260B	9/8/2008	1	8.8	8.80	ND	µg/L	R17246
1,1,1-Trichloroethane	SW8260B	9/8/2008	0.5	8.8	4.40	ND	µg/L	R17246
1,1,2,2-Tetrachloroethane	SW8260B	9/8/2008	1	8.8	8.80	ND	µg/L	R17246
1,1,2-Trichloroethane	SW8260B	9/8/2008	0.5	8.8	4.40	ND	µg/L	R17246
1,1-Dichloroethane	SW8260B	9/8/2008	0.5	8.8	4.40	ND	µg/L	R17246
1,1-Dichloroethene	SW8260B	9/8/2008	1	8.8	8.80	ND	µg/L	R17246
1,1-Dichloropropene	SW8260B	9/8/2008	0.5	8.8	4.40	ND	µg/L	R17246
1,2,3-Trichlorobenzene	SW8260B	9/8/2008	6	8.8	52.8	ND	µg/L	R17246
1,2,3-Trichloropropane	SW8260B	9/8/2008	1	8.8	8.80	ND	µg/L	R17246
1,2,4-Trichlorobenzene	SW8260B	9/8/2008	6	8.8	52.8	ND	µg/L	R17246
1,2,4-Trimethylbenzene	SW8260B	9/8/2008	0.5	8.8	4.40	882	µg/L	R17246
1,2-Dibromo-3-chloropropane	SW8260B	9/8/2008	0.5	8.8	4.40	ND	µg/L	R17246
1,2-Dibromoethane (EDB)	SW8260B	9/8/2008	0.5	8.8	4.40	ND	µg/L	R17246
1,2-Dichlorobenzene	SW8260B	9/8/2008	0.5	8.8	4.40	ND	µg/L	R17246
1,2-Dichloroethane (EDC)	SW8260B	9/8/2008	0.5	8.8	4.40	ND	µg/L	R17246
1,2-Dichloropropane	SW8260B	9/8/2008	6	8.8	52.8	ND	µg/L	R17246
1,3,5-Trimethylbenzene	SW8260B	9/8/2008	0.5	8.8	4.40	291	µg/L	R17246
1,3-Dichlorobenzene	SW8260B	9/8/2008	0.5	8.8	4.40	ND	µg/L	R17246
1,3-Dichloropropene	SW8260B	9/8/2008	0.5	8.8	4.40	ND	µg/L	R17246
1,4-Dichlorobenzene	SW8260B	9/8/2008	0.5	8.8	4.40	ND	µg/L	R17246
2,2-Dichloropropane	SW8260B	9/8/2008	0.5	8.8	4.40	ND	µg/L	R17246
2-Chloroethyl vinyl ether	SW8260B	9/8/2008	1	8.8	8.80	ND	µg/L	R17246
2-Chlorotoluene	SW8260B	9/8/2008	0.5	8.8	4.40	ND	µg/L	R17246
4-Chlorotoluene	SW8260B	9/8/2008	0.5	8.8	4.40	ND	µg/L	R17246
4-Isopropyltoluene	SW8260B	9/8/2008	0.5	8.8	4.40	21.1	µg/L	R17246
Acetone	SW8260B	9/8/2008	10	8.8	88.0	ND	µg/L	R17246
Benzene	SW8260B	9/8/2008	0.5	8.8	4.40	69.8	µg/L	R17246
Bromobenzene	SW8260B	9/8/2008	0.5	8.8	4.40	ND	µg/L	R17246
Bromochloromethane	SW8260B	9/8/2008	0.5	8.8	4.40	ND	µg/L	R17246
Bromodichloromethane	SW8260B	9/8/2008	0.5	8.8	4.40	ND	µg/L	R17246
Bromoform	SW8260B	9/8/2008	1	8.8	8.80	ND	µg/L	R17246
Bromomethane	SW8260B	9/8/2008	6	8.8	52.8	ND	µg/L	R17246
Carbon tetrachloride	SW8260B	9/8/2008	1	8.8	8.80	ND	µg/L	R17246
Chlorobenzene	SW8260B	9/8/2008	0.5	8.8	4.40	ND	µg/L	R17246
Chloroform	SW8260B	9/8/2008	0.5	8.8	4.40	ND	µg/L	R17246
Chloromethane	SW8260B	9/8/2008	0.5	8.8	4.40	ND	µg/L	R17246
cis-1,2-Dichloroethene	SW8260B	9/8/2008	0.5	8.8	4.40	ND	µg/L	R17246
cis-1,3-Dichloropropene	SW8260B	9/8/2008	0.5	8.8	4.40	ND	µg/L	R17246
Dibromochloromethane	SW8260B	9/8/2008	0.5	8.8	4.40	ND	µg/L	R17246
Dibromomethane	SW8260B	9/8/2008	0.5	8.8	4.40	ND	µg/L	R17246
Dichlorodifluoromethane	SW8260B	9/8/2008	0.5	8.8	4.40	ND	µg/L	R17246
Diisopropyl ether (DIPE)	SW8260B	9/8/2008	0.5	8.8	4.40	ND	µg/L	R17246
Ethyl tert-butyl ether (ETBE)	SW8260B	9/8/2008	0.5	8.8	4.40	ND	µg/L	R17246

These analyses were performed according to State of California Environmental Laboratory Accreditation program, Certificate # 1991

Report prepared for: Charlie Almestad
KLEINFELDER

Date Received: 9/5/2008
Date Reported: 9/12/2008

Client Sample ID: DP-5-W
Sample Location: CTO
Sample Matrix: WATER
Date/Time Sampled 9/3/2008 2:30:00 PM

Lab Sample ID: 0809020-006
Date Prepared: 9/8/2008

Parameters	Analysis Method	Date Analyzed	RL	Dilution Factor	MRL	Result	Units	Analytical Batch
Ethylbenzene	SW8260B	9/8/2008	0.5	8.8	4.40	615	µg/L	R17246
Freon-113	SW8260B	9/8/2008	1	8.8	8.80	ND	µg/L	R17246
Hexachlorobutadiene	SW8260B	9/8/2008	0.5	8.8	4.40	ND	µg/L	R17246
Isopropylbenzene	SW8260B	9/8/2008	1	8.8	8.80	34.8	µg/L	R17246
Methyl tert-butyl ether (MTBE)	SW8260B	9/8/2008	0.5	8.8	4.40	ND	µg/L	R17246
Methylene chloride	SW8260B	9/8/2008	5	8.8	44.0	ND	µg/L	R17246
Naphthalene	SW8260B	9/8/2008	6	8.8	52.8	235	µg/L	R17246
n-Butylbenzene	SW8260B	9/8/2008	0.5	8.8	4.40	35.0	µg/L	R17246
n-Propylbenzene	SW8260B	9/8/2008	0.5	8.8	4.40	151	µg/L	R17246
sec-Butylbenzene	SW8260B	9/8/2008	0.5	8.8	4.40	13.0	µg/L	R17246
Styrene	SW8260B	9/8/2008	0.5	8.8	4.40	ND	µg/L	R17246
t-Butyl alcohol (t-Butanol)	SW8260B	9/8/2008	5	8.8	44.0	ND	µg/L	R17246
tert-Amyl methyl ether (TAME)	SW8260B	9/8/2008	0.5	8.8	4.40	ND	µg/L	R17246
tert-Butylbenzene	SW8260B	9/8/2008	0.5	8.8	4.40	ND	µg/L	R17246
Tetrachloroethene	SW8260B	9/8/2008	0.5	8.8	4.40	ND	µg/L	R17246
Toluene	SW8260B	9/8/2008	0.5	8.8	4.40	263	µg/L	R17246
trans-1,2-Dichloroethene	SW8260B	9/8/2008	0.5	8.8	4.40	ND	µg/L	R17246
trans-1,3-Dichloropropene	SW8260B	9/8/2008	0.5	8.8	4.40	ND	µg/L	R17246
Trichloroethene	SW8260B	9/8/2008	0.5	8.8	4.40	ND	µg/L	R17246
Trichlorofluoromethane	SW8260B	9/8/2008	0.5	8.8	4.40	ND	µg/L	R17246
Vinyl chloride	SW8260B	9/8/2008	0.5	8.8	4.40	ND	µg/L	R17246
Xylenes, Total	SW8260B	9/8/2008	1.5	8.8	13.2	3080	µg/L	R17246
Surr: Dibromofluoromethane	SW8260B	9/8/2008	0	8.8	61.2-131	110	%REC	R17246
Surr: 4-Bromofluorobenzene	SW8260B	9/8/2008	0	8.8	64.1-120	112	%REC	R17246
Surr: Toluene-d8	SW8260B	9/8/2008	0	8.8	75.1-127	88.8	%REC	R17246

These analyses were performed according to State of California Environmental Laboratory Accreditation program, Certificate # 1991

Report prepared for: Charlie Almestad
KLEINFELDER

Date Received: 9/5/2008
Date Reported: 9/12/2008

Client Sample ID: MW-5-12
Sample Location: CTO
Sample Matrix: SOIL
Date/Time Sampled 9/4/2008 9:30:00 AM

Lab Sample ID: 0809020-007
Date Prepared: 9/8/2008

Parameters	Analysis Method	Date Analyzed	RL	Dilution Factor	MRL	Result	Units	Analytical Batch
TPH (Diesel-SG)	SW8015B	9/11/2008	2	1	2.00	ND	mg/Kg	R17278
Surr: Pentacosane	SW8015B	9/11/2008	0	1	61.5-133	85.5	%REC	R17278
TPH (Gasoline)	SW8015B	9/8/2008	0.1	1	0.100	ND	mg/Kg	R17253
Surr: Trifluorotoluene	SW8015B	9/8/2008	0	1	65-135	96.5	%REC	R17253

These analyses were performed according to State of California Environmental Laboratory Accreditation program, Certificate # 1991

Report prepared for: Charlie Almestad
KLEINFELDER

Date Received: 9/5/2008
Date Reported: 9/12/2008

Client Sample ID: MW-5-12
Sample Location: CTO
Sample Matrix: SOIL
Date/Time Sampled 9/4/2008 9:30:00 AM

Lab Sample ID: 0809020-007
Date Prepared: 9/8/2008

Parameters	Analysis Method	Date Analyzed	RL	Dilution Factor	MRL	Result	Units	Analytical Batch
1,1,1,2-Tetrachloroethane	SW8260B	9/8/2008	10	1	10	ND	µg/Kg	R17247
1,1,1-Trichloroethane	SW8260B	9/8/2008	10	1	10	ND	µg/Kg	R17247
1,1,2,2-Tetrachloroethane	SW8260B	9/8/2008	10	1	10	ND	µg/Kg	R17247
1,1,2-Trichloroethane	SW8260B	9/8/2008	10	1	10	ND	µg/Kg	R17247
1,1-Dichloroethane	SW8260B	9/8/2008	10	1	10	ND	µg/Kg	R17247
1,1-Dichloroethene	SW8260B	9/8/2008	10	1	10	ND	µg/Kg	R17247
1,1-Dichloropropene	SW8260B	9/8/2008	10	1	10	ND	µg/Kg	R17247
1,2,3-Trichlorobenzene	SW8260B	9/8/2008	10	1	10	ND	µg/Kg	R17247
1,2,3-Trichloropropane	SW8260B	9/8/2008	10	1	10	ND	µg/Kg	R17247
1,2,4-Trichlorobenzene	SW8260B	9/8/2008	10	1	10	ND	µg/Kg	R17247
1,2,4-Trimethylbenzene	SW8260B	9/8/2008	10	1	10	ND	µg/Kg	R17247
1,2-Dibromo-3-chloropropane	SW8260B	9/8/2008	10	1	10	ND	µg/Kg	R17247
1,2-Dibromoethane (EDB)	SW8260B	9/8/2008	10	1	10	ND	µg/Kg	R17247
1,2-Dichlorobenzene	SW8260B	9/8/2008	10	1	10	ND	µg/Kg	R17247
1,2-Dichloroethane (EDC)	SW8260B	9/8/2008	10	1	10	ND	µg/Kg	R17247
1,2-Dichloropropane	SW8260B	9/8/2008	10	1	10	ND	µg/Kg	R17247
1,3,5-Trimethylbenzene	SW8260B	9/8/2008	10	1	10	ND	µg/Kg	R17247
1,3-Dichlorobenzene	SW8260B	9/8/2008	10	1	10	ND	µg/Kg	R17247
1,4-Dichlorobenzene	SW8260B	9/8/2008	10	1	10	ND	µg/Kg	R17247
2,2-Dichloropropane	SW8260B	9/8/2008	10	1	10	ND	µg/Kg	R17247
2-Chloroethyl vinyl ether	SW8260B	9/8/2008	10	1	10	ND	µg/Kg	R17247
2-Chlorotoluene	SW8260B	9/8/2008	10	1	10	ND	µg/Kg	R17247
4-Chlorotoluene	SW8260B	9/8/2008	10	1	10	ND	µg/Kg	R17247
4-Isopropyltoluene	SW8260B	9/8/2008	10	1	10	ND	µg/Kg	R17247
Benzene	SW8260B	9/8/2008	10	1	10	ND	µg/Kg	R17247
Bromobenzene	SW8260B	9/8/2008	10	1	10	ND	µg/Kg	R17247
Bromochloromethane	SW8260B	9/8/2008	10	1	10	ND	µg/Kg	R17247
Bromodichloromethane	SW8260B	9/8/2008	10	1	10	ND	µg/Kg	R17247
Bromoform	SW8260B	9/8/2008	10	1	10	ND	µg/Kg	R17247
Bromomethane	SW8260B	9/8/2008	10	1	10	ND	µg/Kg	R17247
Carbon tetrachloride	SW8260B	9/8/2008	10	1	10	ND	µg/Kg	R17247
Chlorobenzene	SW8260B	9/8/2008	10	1	10	ND	µg/Kg	R17247
Chloroform	SW8260B	9/8/2008	10	1	10	ND	µg/Kg	R17247
Chloromethane	SW8260B	9/8/2008	10	1	10	ND	µg/Kg	R17247
cis-1,2-Dichloroethene	SW8260B	9/8/2008	10	1	10	ND	µg/Kg	R17247
cis-1,3-Dichloropropene	SW8260B	9/8/2008	10	1	10	ND	µg/Kg	R17247
Dibromochloromethane	SW8260B	9/8/2008	10	1	10	ND	µg/Kg	R17247
Dibromomethane	SW8260B	9/8/2008	10	1	10	ND	µg/Kg	R17247
Dichlorodifluoromethane	SW8260B	9/8/2008	10	1	10	ND	µg/Kg	R17247
Ethyl tert-butyl ether (ETBE)	SW8260B	9/8/2008	10	1	10	ND	µg/Kg	R17247
Ethylbenzene	SW8260B	9/8/2008	10	1	10	ND	µg/Kg	R17247
Freon-113	SW8260B	9/8/2008	10	1	10	ND	µg/Kg	R17247
Hexachlorobutadiene	SW8260B	9/8/2008	10	1	10	ND	µg/Kg	R17247

These analyses were performed according to State of California Environmental Laboratory Accreditation program, Certificate # 1991

Report prepared for: Charlie Almestad
KLEINFELDER

Date Received: 9/5/2008
Date Reported: 9/12/2008

Client Sample ID: MW-5-12
Sample Location: CTO
Sample Matrix: SOIL
Date/Time Sampled 9/4/2008 9:30:00 AM

Lab Sample ID: 0809020-007
Date Prepared: 9/8/2008

Parameters	Analysis Method	Date Analyzed	RL	Dilution Factor	MRL	Result	Units	Analytical Batch
Isopropyl Ether	SW8260B	9/8/2008	10	1	10	ND	µg/Kg	R17247
Isopropylbenzene	SW8260B	9/8/2008	10	1	10	ND	µg/Kg	R17247
Methyl tert-butyl ether (MTBE)	SW8260B	9/8/2008	10	1	10	ND	µg/Kg	R17247
Methylene chloride	SW8260B	9/8/2008	50	1	50	ND	µg/Kg	R17247
Naphthalene	SW8260B	9/8/2008	20	1	20	ND	µg/Kg	R17247
n-Butylbenzene	SW8260B	9/8/2008	10	1	10	ND	µg/Kg	R17247
n-Propylbenzene	SW8260B	9/8/2008	10	1	10	ND	µg/Kg	R17247
sec-Butylbenzene	SW8260B	9/8/2008	10	1	10	ND	µg/Kg	R17247
Styrene	SW8260B	9/8/2008	10	1	10	ND	µg/Kg	R17247
t-Butyl alcohol (t-Butanol)	SW8260B	9/8/2008	50	1	50	ND	µg/Kg	R17247
tert-Amyl methyl ether (TAME)	SW8260B	9/8/2008	10	1	10	ND	µg/Kg	R17247
tert-Butylbenzene	SW8260B	9/8/2008	10	1	10	ND	µg/Kg	R17247
Tetrachloroethene	SW8260B	9/8/2008	10	1	10	ND	µg/Kg	R17247
Toluene	SW8260B	9/8/2008	10	1	10	ND	µg/Kg	R17247
trans-1,2-Dichloroethene	SW8260B	9/8/2008	10	1	10	ND	µg/Kg	R17247
trans-1,3-Dichloropropene	SW8260B	9/8/2008	10	1	10	ND	µg/Kg	R17247
Trichloroethene	SW8260B	9/8/2008	10	1	10	ND	µg/Kg	R17247
Trichlorofluoromethane	SW8260B	9/8/2008	10	1	10	ND	µg/Kg	R17247
Vinyl chloride	SW8260B	9/8/2008	10	1	10	ND	µg/Kg	R17247
Xylenes, Total	SW8260B	9/8/2008	15	1	15	ND	µg/Kg	R17247
Surr: 4-Bromofluorobenzene	SW8260B	9/8/2008	0	1	55.8-141	90.3	%REC	R17247
Surr: Dibromofluoromethane	SW8260B	9/8/2008	0	1	59.8-148	112	%REC	R17247
Surr: Toluene-d8	SW8260B	9/8/2008	0	1	55.2-133	89.2	%REC	R17247
Total Organic Carbon	SW9060	9/5/2008	25	1	25	ND	mg/Kg	R17242

These analyses were performed according to State of California Environmental Laboratory Accreditation program, Certificate # 1991

Definitions, legends and Notes

Note	Description
ug/kg	Microgram per kilogram (ppb, part per billion).
ug/L	Microgram per liter (ppb, part per billion).
mg/kg	Milligram per kilogram (ppm, part per million).
mg/L	Milligram per liter (ppm, part per million).
LCS/LCSD	Laboratory control sample/laboratory control sample duplicate.
MDL	Method detection limit.
MRL	Modified reporting limit. When sample is subject to dilution, reporting limit times dilution factor yields MRL.
MS/MSD	Matrix spike/matrix spike duplicate.
N/A	Not applicable.
ND	Not detected at or above detection limit.
NR	Not reported.
QC	Quality Control.
RL	Reporting limit.
% RPD	Percent relative difference.
a	pH was measured immediately upon the receipt of the sample, but it was still done outside the holding time.
sub	Analyzed by subcontracting laboratory, Lab Certificate #

These analyses were performed according to State of California Environmental Laboratory Accreditation program, Certificate # 1991

Torrent Laboratory, Inc.

Date: *12-Sep-08*

CLIENT: KLEINFELDER
Work Order: 0809020
Project: 95539

ANALYTICAL QC SUMMARY REPORT

BatchID: R17242

Sample ID **MBLK**	SampType: **MBLK**	TestCode: **TOC_S**	Units: **mg/Kg**	Prep Date:	RunNo: **17242**
Client ID: **ZZZZZ**	Batch ID: **R17242**	TestNo: **SW9060**		Analysis Date: **9/5/2008**	SeqNo: **246953**

Analyte	Result	PQL	SPK value	SPK Ref Val	%REC	LowLimit	HighLimit	RPD Ref Val	%RPD	RPDLimit	Qual
Total Organic Carbon	ND	25									

Sample ID **LCS**	SampType: **LCS**	TestCode: **TOC_S**	Units: **mg/Kg**	Prep Date:	RunNo: **17242**
Client ID: **ZZZZZ**	Batch ID: **R17242**	TestNo: **SW9060**		Analysis Date: **9/5/2008**	SeqNo: **246951**

Analyte	Result	PQL	SPK value	SPK Ref Val	%REC	LowLimit	HighLimit	RPD Ref Val	%RPD	RPDLimit	Qual
Total Organic Carbon	211200	25	266600	0	79.2	60	140				

Sample ID **LCSD**	SampType: **LCSD**	TestCode: **TOC_S**	Units: **mg/Kg**	Prep Date:	RunNo: **17242**
Client ID: **ZZZZZ**	Batch ID: **R17242**	TestNo: **SW9060**		Analysis Date: **9/5/2008**	SeqNo: **246952**

Analyte	Result	PQL	SPK value	SPK Ref Val	%REC	LowLimit	HighLimit	RPD Ref Val	%RPD	RPDLimit	Qual
Total Organic Carbon	215800	25	266600	0	80.9	60	140	211200	2.15	30	

Qualifiers:

E	Value above quantitation range	H	Holding times for preparation or analysis exceeded	J	Analyte detected below quantitation limits
ND	Not Detected at the Reporting Limit	R	RPD outside accepted recovery limits	S	Spike Recovery outside accepted recovery limits

CLIENT: KLEINFELDER
Work Order: 0809020
Project: 95539

ANALYTICAL QC SUMMARY REPORT

BatchID: R17246

Sample ID	MB_R17246	SampType:	MBLK	TestCode:	8260B_W	Units:	µg/L	Prep Date:	9/8/2008	RunNo:	17246
Client ID:	ZZZZZ	Batch ID:	R17246	TestNo:	SW8260B			Analysis Date:	9/8/2008	SeqNo:	246996

Analyte	Result	PQL	SPK value	SPK Ref Val	%REC	LowLimit	HighLimit	RPD Ref Val	%RPD	RPDLimit	Qual
1,1,1,2-Tetrachloroethane	ND	1.00									
1,1,1-Trichloroethane	ND	0.500									
1,1,2,2-Tetrachloroethane	ND	1.00									
1,1,2-Trichloroethane	ND	0.500									
1,1-Dichloroethane	ND	0.500									
1,1-Dichloroethene	ND	1.00									
1,1-Dichloropropene	ND	0.500									
1,2,3-Trichlorobenzene	ND	6.00									
1,2,3-Trichloropropane	ND	1.00									
1,2,4-Trichlorobenzene	ND	6.00									
1,2,4-Trimethylbenzene	ND	0.500									
1,2-Dibromo-3-chloropropane	ND	0.500									
1,2-Dibromoethane (EDB)	ND	0.500									
1,2-Dichlorobenzene	ND	0.500									
1,2-Dichloroethane (EDC)	ND	0.500									
1,2-Dichloropropane	ND	6.00									
1,3,5-Trimethylbenzene	ND	0.500									
1,3-Dichlorobenzene	ND	0.500									
1,4-Dichlorobenzene	ND	0.500									
2,2-Dichloropropane	ND	0.500									
2-Chloroethyl vinyl ether	ND	1.00									
2-Chlorotoluene	ND	0.500									
4-Chlorotoluene	ND	0.500									
4-Isopropyltoluene	ND	0.500									
Acetone	ND	10.0									
Benzene	ND	0.500									
Bromobenzene	ND	0.500									
Bromochloromethane	ND	0.500									
Bromodichloromethane	ND	0.500									
Bromoform	ND	1.00									
Bromomethane	ND	6.00									

Qualifiers:

E	Value above quantitation range	H	Holding times for preparation or analysis exceeded	J	Analyte detected below quantitation limits
ND	Not Detected at the Reporting Limit	R	RPD outside accepted recovery limits	S	Spike Recovery outside accepted recovery limits

CLIENT: KLEINFELDER
Work Order: 0809020
Project: 95539

ANALYTICAL QC SUMMARY REPORT

BatchID: R17246

Sample ID	MB_R17246	SampType:	MBLK	TestCode:	8260B_W	Units:	µg/L	Prep Date:	9/8/2008	RunNo:	17246
Client ID:	ZZZZZ	Batch ID:	R17246	TestNo:	SW8260B			Analysis Date:	9/8/2008	SeqNo:	246996

Analyte	Result	PQL	SPK value	SPK Ref Val	%REC	LowLimit	HighLimit	RPD Ref Val	%RPD	RPDLimit	Qual
Carbon tetrachloride	ND	1.00									
Chlorobenzene	ND	0.500									
Chloroform	ND	0.500									
Chloromethane	ND	0.500									
cis-1,2-Dichloroethene	ND	0.500									
cis-1,3-Dichloropropene	ND	0.500									
Dibromochloromethane	ND	0.500									
Dibromomethane	ND	0.500									
Dichlorodifluoromethane	ND	0.500									
Diisopropyl ether (DIPE)	ND	0.500									
Ethyl tert-butyl ether (ETBE)	ND	0.500									
Ethylbenzene	ND	0.500									
Freon-113	ND	1.00									
Hexachlorobutadiene	ND	0.500									
Isopropylbenzene	ND	1.00									
Methyl tert-butyl ether (MTBE)	ND	0.500									
Methylene chloride	ND	5.00									
Naphthalene	ND	6.00									
n-Butylbenzene	ND	0.500									
n-Propylbenzene	ND	0.500									
sec-Butylbenzene	ND	0.500									
Styrene	ND	0.500									
t-Butyl alcohol (t-Butanol)	ND	5.00									
tert-Amyl methyl ether (TAME)	ND	0.500									
tert-Butylbenzene	ND	0.500									
Tetrachloroethene	ND	0.500									
Toluene	ND	0.500									
trans-1,2-Dichloroethene	ND	0.500									
trans-1,3-Dichloropropene	ND	0.500									
Trichloroethene	ND	0.500									
Trichlorofluoromethane	ND	0.500									

Qualifiers:

E	Value above quantitation range	H	Holding times for preparation or analysis exceeded	J	Analyte detected below quantitation limits
ND	Not Detected at the Reporting Limit	R	RPD outside accepted recovery limits	S	Spike Recovery outside accepted recovery limits

CLIENT: KLEINFELDER
Work Order: 0809020
Project: 95539

ANALYTICAL QC SUMMARY REPORT

BatchID: R17246

Sample ID **MB_R17246** SampType: **MBLK** TestCode: **8260B_W** Units: **µg/L** Prep Date: **9/8/2008** RunNo: **17246**
Client ID: **ZZZZZ** Batch ID: **R17246** TestNo: **SW8260B** Analysis Date: **9/8/2008** SeqNo: **246996**

Analyte	Result	PQL	SPK value	SPK Ref Val	%REC	LowLimit	HighLimit	RPD Ref Val	%RPD	RPDLimit	Qual
Vinyl chloride	ND	0.500									
Xylenes, Total	ND	1.50									
Surr: Dibromofluoromethane	12.44	0	11.36	0	110	61.2	131				
Surr: 4-Bromofluorobenzene	10.81	0	11.36	0	95.2	64.1	120				
Surr: Toluene-d8	13.15	0	11.36	0	116	75.1	127				

Sample ID **LCS_R17246** SampType: **LCS** TestCode: **8260B_W** Units: **µg/L** Prep Date: **9/8/2008** RunNo: **17246**
Client ID: **ZZZZZ** Batch ID: **R17246** TestNo: **SW8260B** Analysis Date: **9/8/2008** SeqNo: **246997**

Analyte	Result	PQL	SPK value	SPK Ref Val	%REC	LowLimit	HighLimit	RPD Ref Val	%RPD	RPDLimit	Qual
1,1-Dichloroethene	18.21	1.00	17.04	0	107	61.4	129				
Benzene	19.33	0.500	17.04	0	113	66.9	140				
Chlorobenzene	18.79	0.500	17.04	0	110	73.9	137				
Toluene	19.98	0.500	17.04	0	117	76.6	123				
Trichloroethene	20.35	0.500	17.04	0	119	69.3	144				
Surr: Dibromofluoromethane	12.79	0	11.36	0	113	61.2	131				
Surr: 4-Bromofluorobenzene	9.550	0	11.36	0	84.1	64.1	120				
Surr: Toluene-d8	11.43	0	11.36	0	101	75.1	127				

Sample ID **LCSD_R17246** SampType: **LCSD** TestCode: **8260B_W** Units: **µg/L** Prep Date: **9/8/2008** RunNo: **17246**
Client ID: **ZZZZZ** Batch ID: **R17246** TestNo: **SW8260B** Analysis Date: **9/8/2008** SeqNo: **246998**

Analyte	Result	PQL	SPK value	SPK Ref Val	%REC	LowLimit	HighLimit	RPD Ref Val	%RPD	RPDLimit	Qual
1,1-Dichloroethene	17.11	1.00	17.04	0	100	61.4	129	18.21	6.23	20	
Benzene	17.83	0.500	17.04	0	105	66.9	140	19.33	8.07	20	
Chlorobenzene	18.83	0.500	17.04	0	111	73.9	137	18.79	0.213	20	
Toluene	20.00	0.500	17.04	0	117	76.6	123	19.98	0.100	20	
Trichloroethene	18.39	0.500	17.04	0	108	69.3	144	20.35	10.1	20	
Surr: Dibromofluoromethane	12.68	0	11.36	0	112	61.2	131	0	0	0	
Surr: 4-Bromofluorobenzene	10.47	0	11.36	0	92.2	64.1	120	0	0	0	
Surr: Toluene-d8	12.38	0	11.36	0	109	75.1	127	0	0	0	

Qualifiers:
E Value above quantitation range
ND Not Detected at the Reporting Limit
H Holding times for preparation or analysis exceeded
R RPD outside accepted recovery limits
J Analyte detected below quantitation limits
S Spike Recovery outside accepted recovery limits

CLIENT: KLEINFELDER
Work Order: 0809020
Project: 95539

ANALYTICAL QC SUMMARY REPORT

BatchID: R17247

Sample ID **MB_R17247**	SampType: **MBLK**	TestCode: **8260B_S**	Units: **µg/Kg**	Prep Date: **9/8/2008**	RunNo: **17247**
Client ID: **ZZZZZ**	Batch ID: **R17247**	TestNo: **SW8260B**		Analysis Date: **9/8/2008**	SeqNo: **247003**

Analyte	Result	PQL	SPK value	SPK Ref Val	%REC	LowLimit	HighLimit	RPD Ref Val	%RPD	RPDLimit	Qual
1,1,1,2-Tetrachloroethane	ND	10									
1,1,1-Trichloroethane	ND	10									
1,1,2,2-Tetrachloroethane	ND	10									
1,1,2-Trichloroethane	ND	10									
1,1-Dichloroethane	ND	10									
1,1-Dichloroethene	ND	10									
1,1-Dichloropropene	ND	10									
1,2,3-Trichlorobenzene	ND	10									
1,2,3-Trichloropropane	ND	10									
1,2,4-Trichlorobenzene	ND	10									
1,2,4-Trimethylbenzene	ND	10									
1,2-Dibromo-3-chloropropane	ND	10									
1,2-Dibromoethane (EDB)	ND	10									
1,2-Dichlorobenzene	ND	10									
1,2-Dichloroethane (EDC)	ND	10									
1,2-Dichloropropane	ND	10									
1,3,5-Trimethylbenzene	ND	10									
1,3-Dichlorobenzene	ND	10									
1,3-Dichloropropene	ND	10									
1,4-Dichlorobenzene	ND	10									
2,2-Dichloropropane	ND	10									
2-Chloroethyl vinyl ether	ND	10									
2-Chlorotoluene	ND	10									
4-Chlorotoluene	ND	10									
4-Isopropyltoluene	ND	10									
Benzene	ND	10									
Bromobenzene	ND	10									
Bromochloromethane	ND	10									
Bromodichloromethane	ND	10									
Bromoform	ND	10									
Bromomethane	ND	10									

Qualifiers:

E	Value above quantitation range	H	Holding times for preparation or analysis exceeded	J	Analyte detected below quantitation limits
ND	Not Detected at the Reporting Limit	R	RPD outside accepted recovery limits	S	Spike Recovery outside accepted recovery limits

CLIENT: KLEINFELDER
Work Order: 0809020
Project: 95539

ANALYTICAL QC SUMMARY REPORT

BatchID: R17247

Sample ID	MB_R17247	SampType:	MBLK	TestCode:	8260B_S	Units:	µg/Kg	Prep Date:	9/8/2008	RunNo:	17247
Client ID:	ZZZZZ	Batch ID:	R17247	TestNo:	SW8260B			Analysis Date:	9/8/2008	SeqNo:	247003

Analyte	Result	PQL	SPK value	SPK Ref Val	%REC	LowLimit	HighLimit	RPD Ref Val	%RPD	RPDLimit	Qual
Carbon tetrachloride	ND	10									
Chlorobenzene	ND	10									
Chloroform	ND	10									
Chloromethane	ND	10									
cis-1,2-Dichloroethene	ND	10									
cis-1,3-Dichloropropene	ND	10									
Dibromochloromethane	ND	10									
Dibromomethane	ND	10									
Dichlorodifluoromethane	ND	10									
Ethyl tert-butyl ether (ETBE)	ND	10									
Ethylbenzene	ND	10									
Freon-113	ND	10									
Hexachlorobutadiene	ND	10									
Isopropyl Ether	ND	10									
Isopropylbenzene	ND	10									
Methyl tert-butyl ether (MTBE)	ND	10									
Methylene chloride	ND	50									
Naphthalene	ND	20									
n-Butylbenzene	ND	10									
n-Propylbenzene	ND	10									
sec-Butylbenzene	ND	10									
Styrene	ND	10									
t-Butyl alcohol (t-Butanol)	ND	50									
tert-Amyl methyl ether (TAME)	ND	10									
tert-Butylbenzene	ND	10									
Tetrachloroethene	ND	10									
Toluene	ND	10									
trans-1,2-Dichloroethene	ND	10									
trans-1,3-Dichloropropene	ND	10									
Trichloroethene	ND	10									
Trichlorofluoromethane	ND	10									

Qualifiers:

E	Value above quantitation range	H	Holding times for preparation or analysis exceeded	J	Analyte detected below quantitation limits
ND	Not Detected at the Reporting Limit	R	RPD outside accepted recovery limits	S	Spike Recovery outside accepted recovery limits

CLIENT: KLEINFELDER
Work Order: 0809020
Project: 95539

ANALYTICAL QC SUMMARY REPORT

BatchID: R17247

Sample ID **MB_R17247** SampType: **MBLK** TestCode: **8260B_S** Units: **µg/Kg** Prep Date: **9/8/2008** RunNo: **17247**
Client ID: **ZZZZZ** Batch ID: **R17247** TestNo: **SW8260B** Analysis Date: **9/8/2008** SeqNo: **247003**

Analyte	Result	PQL	SPK value	SPK Ref Val	%REC	LowLimit	HighLimit	RPD Ref Val	%RPD	RPDLimit	Qual
Vinyl chloride	ND	10									
Xylenes, Total	ND	15									
Surr: 4-Bromofluorobenzene	45.53	0	50	0	91.1	55.8	141				
Surr: Dibromofluoromethane	53.35	0	50	0	107	59.8	148				
Surr: Toluene-d8	44.25	0	50	0	88.5	55.2	133				

Sample ID **LCS_R17247** SampType: **LCS** TestCode: **8260B_S** Units: **µg/Kg** Prep Date: **9/8/2008** RunNo: **17247**
Client ID: **ZZZZZ** Batch ID: **R17247** TestNo: **SW8260B** Analysis Date: **9/8/2008** SeqNo: **247004**

Analyte	Result	PQL	SPK value	SPK Ref Val	%REC	LowLimit	HighLimit	RPD Ref Val	%RPD	RPDLimit	Qual
1,1-Dichloroethene	53.90	10	50	0	108	53.7	139				
Benzene	50.58	10	50	0	101	66.5	135				
Chlorobenzene	53.16	10	50	0	106	57.5	150				
Toluene	42.57	10	50	0	85.1	56.8	134				
Trichloroethene	58.08	10	50	0	116	57.4	134				
Surr: 4-Bromofluorobenzene	50.05	0	50	0	100	55.8	141				
Surr: Dibromofluoromethane	66.19	0	50	0	132	59.8	148				
Surr: Toluene-d8	49.78	0	50	0	99.6	55.2	133				

Sample ID **LCSD_R17247** SampType: **LCSD** TestCode: **8260B_S** Units: **µg/Kg** Prep Date: **9/8/2008** RunNo: **17247**
Client ID: **ZZZZZ** Batch ID: **R17247** TestNo: **SW8260B** Analysis Date: **9/8/2008** SeqNo: **247005**

Analyte	Result	PQL	SPK value	SPK Ref Val	%REC	LowLimit	HighLimit	RPD Ref Val	%RPD	RPDLimit	Qual
1,1-Dichloroethene	52.67	10	50	0	105	53.7	139	53.9	2.31	30	
Benzene	55.71	10	50	0	111	66.5	135	50.58	9.65	30	
Chlorobenzene	42.01	10	50	0	84.0	57.5	150	53.16	23.4	30	
Toluene	45.38	10	50	0	90.8	56.8	134	42.57	6.39	30	
Trichloroethene	60.23	10	50	0	120	57.4	134	58.08	3.63	30	
Surr: 4-Bromofluorobenzene	51.38	0	50	0	103	55.8	141	0	0	0	
Surr: Dibromofluoromethane	68.10	0	50	0	136	59.8	148	0	0	0	
Surr: Toluene-d8	48.88	0	50	0	97.8	55.2	133	0	0	0	

Qualifiers:
E Value above quantitation range
ND Not Detected at the Reporting Limit
H Holding times for preparation or analysis exceeded
R RPD outside accepted recovery limits
J Analyte detected below quantitation limits
S Spike Recovery outside accepted recovery limits

CLIENT: KLEINFELDER
Work Order: 0809020
Project: 95539

ANALYTICAL QC SUMMARY REPORT

BatchID: R17251

Sample ID	WDSG080908A-MB	SampType:	MBLK	TestCode:	TPHDSG_W	Units:	mg/L	Prep Date:	9/8/2008	RunNo:	17251
Client ID:	ZZZZZ	Batch ID:	R17251	TestNo:	SW8015B			Analysis Date:	9/8/2008	SeqNo:	247054

Analyte	Result	PQL	SPK value	SPK Ref Val	%REC	LowLimit	HighLimit	RPD Ref Val	%RPD	RPDLimit	Qual
TPH (Diesel-SG)	ND	0.100									
Surr: Pentacosane	0.09100	0	0.1	0	91.0	64.2	123				

Sample ID	WDSG080908A-LCS	SampType:	LCS	TestCode:	TPHDSG_W	Units:	mg/L	Prep Date:	9/8/2008	RunNo:	17251
Client ID:	ZZZZZ	Batch ID:	R17251	TestNo:	SW8015B			Analysis Date:	9/8/2008	SeqNo:	247062

Analyte	Result	PQL	SPK value	SPK Ref Val	%REC	LowLimit	HighLimit	RPD Ref Val	%RPD	RPDLimit	Qual
TPH (Diesel-SG)	0.5730	0.100	1	0	57.3	34.5	95.6				
Surr: Pentacosane	0.08000	0	0.1	0	80.0	64.2	123				

Sample ID	WDSG080908A-LCS	SampType:	LCSD	TestCode:	TPHDSG_W	Units:	mg/L	Prep Date:	9/8/2008	RunNo:	17251
Client ID:	ZZZZZ	Batch ID:	R17251	TestNo:	SW8015B			Analysis Date:	9/8/2008	SeqNo:	247063

Analyte	Result	PQL	SPK value	SPK Ref Val	%REC	LowLimit	HighLimit	RPD Ref Val	%RPD	RPDLimit	Qual
TPH (Diesel-SG)	0.6740	0.100	1	0	67.4	34.5	95.6	0.573	16.2	30	
Surr: Pentacosane	0.09700	0	0.1	0	97.0	64.2	123	0	0	0	

Qualifiers:

E	Value above quantitation range	H	Holding times for preparation or analysis exceeded	J	Analyte detected below quantitation limits
ND	Not Detected at the Reporting Limit	R	RPD outside accepted recovery limits	S	Spike Recovery outside accepted recovery limits

CLIENT: KLEINFELDER
Work Order: 0809020
Project: 95539

ANALYTICAL QC SUMMARY REPORT

BatchID: R17253

Sample ID	MB_R17253	SampType:	MBLK	TestCode:	TPHGAS_S	Units:	mg/Kg	Prep Date:	9/8/2008	RunNo:	17253
Client ID:	ZZZZZ	Batch ID:	R17253	TestNo:	SW8015B			Analysis Date:	9/8/2008	SeqNo:	247108

Analyte	Result	PQL	SPK value	SPK Ref Val	%REC	LowLimit	HighLimit	RPD Ref Val	%RPD	RPDLimit	Qual
TPH (Gasoline)	ND	0.100									
Surr: Trifluorotoluene	0.2118	0	0.2	0	106	65	135				

Sample ID	LCS_R17253	SampType:	LCS	TestCode:	TPHGAS_S	Units:	mg/Kg	Prep Date:	9/8/2008	RunNo:	17253
Client ID:	ZZZZZ	Batch ID:	R17253	TestNo:	SW8015B			Analysis Date:	9/8/2008	SeqNo:	247109

Analyte	Result	PQL	SPK value	SPK Ref Val	%REC	LowLimit	HighLimit	RPD Ref Val	%RPD	RPDLimit	Qual
TPH (Gasoline)	0.8510	0.100	1	0	85.1	65	135				
Surr: Trifluorotoluene	0.2326	0	0.2	0	116	65	135				

Sample ID	LCSD_R17253	SampType:	LCSD	TestCode:	TPHGAS_S	Units:	mg/Kg	Prep Date:	9/8/2008	RunNo:	17253
Client ID:	ZZZZZ	Batch ID:	R17253	TestNo:	SW8015B			Analysis Date:	9/8/2008	SeqNo:	247110

Analyte	Result	PQL	SPK value	SPK Ref Val	%REC	LowLimit	HighLimit	RPD Ref Val	%RPD	RPDLimit	Qual
TPH (Gasoline)	0.8733	0.100	1	0	87.3	65	135	0.851	2.59	30	
Surr: Trifluorotoluene	0.2280	0	0.2	0	114	65	135	0	0	30	

Qualifiers:

E	Value above quantitation range	H	Holding times for preparation or analysis exceeded	J	Analyte detected below quantitation limits
ND	Not Detected at the Reporting Limit	R	RPD outside accepted recovery limits	S	Spike Recovery outside accepted recovery limits

CLIENT: KLEINFELDER
Work Order: 0809020
Project: 95539

ANALYTICAL QC SUMMARY REPORT

BatchID: R17258

Sample ID **BLK-R17258** SampType: **MBLK** TestCode: **TPHGAS_W** Units: **mg/L** Prep Date: **9/9/2008** RunNo: **17258**
Client ID: **ZZZZZ** Batch ID: **R17258** TestNo: **SW8015B** Analysis Date: **9/9/2008** SeqNo: **247198**

Analyte	Result	PQL	SPK value	SPK Ref Val	%REC	LowLimit	HighLimit	RPD Ref Val	%RPD	RPDLimit	Qual
TPH (Gasoline)	ND	0.0500									
Surr: Trifluorotoluene	0.07550	0	0.1136	0	66.5	65	135				

Sample ID **LCS_R17258** SampType: **LCS** TestCode: **TPHGAS_W** Units: **mg/L** Prep Date: **9/9/2008** RunNo: **17258**
Client ID: **ZZZZZ** Batch ID: **R17258** TestNo: **SW8015B** Analysis Date: **9/9/2008** SeqNo: **247152**

Analyte	Result	PQL	SPK value	SPK Ref Val	%REC	LowLimit	HighLimit	RPD Ref Val	%RPD	RPDLimit	Qual
TPH (Gasoline)	0.1822	0.0500	0.2272	0	80.2	65	135				
Surr: Trifluorotoluene	0.1210	0	0.1136	0	107	65	135				

Sample ID **LCSD_R17258** SampType: **LCSD** TestCode: **TPHGAS_W** Units: **mg/L** Prep Date: **9/9/2008** RunNo: **17258**
Client ID: **ZZZZZ** Batch ID: **R17258** TestNo: **SW8015B** Analysis Date: **9/9/2008** SeqNo: **247153**

Analyte	Result	PQL	SPK value	SPK Ref Val	%REC	LowLimit	HighLimit	RPD Ref Val	%RPD	RPDLimit	Qual
TPH (Gasoline)	0.1838	0.0500	0.2272	0	80.9	65	135	0.1822	0.874	20	
Surr: Trifluorotoluene	0.1183	0	0.1136	0	104	65	135	0	0	20	

Qualifiers:

E	Value above quantitation range	H	Holding times for preparation or analysis exceeded	J	Analyte detected below quantitation limits
ND	Not Detected at the Reporting Limit	R	RPD outside accepted recovery limits	S	Spike Recovery outside accepted recovery limits

CLIENT: KLEINFELDER
Work Order: 0809020
Project: 95539

ANALYTICAL QC SUMMARY REPORT

BatchID: R17278

Sample ID **MB-R17278** SampType: **MBLK** TestCode: **TPHDSG_S** Units: **mg/Kg** Prep Date: **9/9/2008** RunNo: **17278**
Client ID: **ZZZZZ** Batch ID: **R17278** TestNo: **SW8015B** Analysis Date: **9/10/2008** SeqNo: **247407**

Analyte	Result	PQL	SPK value	SPK Ref Val	%REC	LowLimit	HighLimit	RPD Ref Val	%RPD	RPDLimit	Qual
TPH (Diesel-SG)	ND	2.00									
Surr: Pentacosane	2.921	0	3.3	0	88.5	61.5	133				

Sample ID **MB-R17278** SampType: **MBLK** TestCode: **TPHDSG_S** Units: **mg/Kg** Prep Date: **9/11/2008** RunNo: **17278**
Client ID: **ZZZZZ** Batch ID: **R17278** TestNo: **SW8015B** Analysis Date: **9/11/2008** SeqNo: **247418**

Analyte	Result	PQL	SPK value	SPK Ref Val	%REC	LowLimit	HighLimit	RPD Ref Val	%RPD	RPDLimit	Qual
TPH (Diesel-SG)	ND	2.00									
Surr: Pentacosane	2.857	0	3.3	0	86.6	61.5	133				

Sample ID **LCS** SampType: **LCS** TestCode: **TPHDSG_S** Units: **mg/Kg** Prep Date: **9/9/2008** RunNo: **17278**
Client ID: **ZZZZZ** Batch ID: **R17278** TestNo: **SW8015B** Analysis Date: **9/10/2008** SeqNo: **247416**

Analyte	Result	PQL	SPK value	SPK Ref Val	%REC	LowLimit	HighLimit	RPD Ref Val	%RPD	RPDLimit	Qual
TPH (Diesel-SG)	29.75	2.00	33.33	0	89.3	50.8	111				
Surr: Pentacosane	2.711	0	3.3	0	82.2	61.5	133				

Sample ID **LCSD** SampType: **LCSD** TestCode: **TPHDSG_S** Units: **mg/Kg** Prep Date: **9/9/2008** RunNo: **17278**
Client ID: **ZZZZZ** Batch ID: **R17278** TestNo: **SW8015B** Analysis Date: **9/10/2008** SeqNo: **247417**

Analyte	Result	PQL	SPK value	SPK Ref Val	%REC	LowLimit	HighLimit	RPD Ref Val	%RPD	RPDLimit	Qual
TPH (Diesel-SG)	30.71	2.00	33.33	0	92.1	50.8	111	29.75	3.17	30	
Surr: Pentacosane	2.889	0	3.3	0	87.5	61.5	133	0	0	0	

Sample ID **0809020-007AMS** SampType: **MS** TestCode: **TPHDSG_S** Units: **mg/Kg** Prep Date: **9/9/2008** RunNo: **17278**
Client ID: **MW-5-12** Batch ID: **R17278** TestNo: **SW8015B** Analysis Date: **9/10/2008** SeqNo: **247414**

Analyte	Result	PQL	SPK value	SPK Ref Val	%REC	LowLimit	HighLimit	RPD Ref Val	%RPD	RPDLimit	Qual
TPH (Diesel-SG)	31.59	2.00	33.33	0	94.8	50.8	111				
Surr: Pentacosane	2.913	0	3.3	0	88.3	61.5	133				

Qualifiers:
E Value above quantitation range
ND Not Detected at the Reporting Limit
H Holding times for preparation or analysis exceeded
R RPD outside accepted recovery limits
J Analyte detected below quantitation limits
S Spike Recovery outside accepted recovery limits

CLIENT: KLEINFELDER
Work Order: 0809020
Project: 95539

ANALYTICAL QC SUMMARY REPORT

BatchID: R17278

Sample ID	0809020-007AMSD	SampType:	MSD	TestCode:	TPHDSG_S	Units:	mg/Kg	Prep Date:	9/9/2008	RunNo:	17278
Client ID:	MW-5-12	Batch ID:	R17278	TestNo:	SW8015B			Analysis Date:	9/10/2008	SeqNo:	247415

Analyte	Result	PQL	SPK value	SPK Ref Val	%REC	LowLimit	HighLimit	RPD Ref Val	%RPD	RPDLimit	Qual
TPH (Diesel-SG)	30.59	2.00	33.33	0	91.8	50.8	111	31.59	3.22	30	
Surr: Pentacosane	2.969	0	3.3	0	90.0	61.5	133	0	0	0	

Qualifiers:

E	Value above quantitation range	H	Holding times for preparation or analysis exceeded	J	Analyte detected below quantitation limits
ND	Not Detected at the Reporting Limit	R	RPD outside accepted recovery limits	S	Spike Recovery outside accepted recovery limits

KLEINFELDER
Bright People. Right Solutions.

0809020

PROJECT NO.	PROJECT NAME
95539	CTO

L.P. NO. (PO. NO.):

SAMPLERS: (Signature/Number): Jeff Gravesen

RECEIVING LAB: Torrent

INSTRUCTIONS/REMARKS: Std TAT

	DATE MM/DD/YY	SAMPLE I.D. TIME HH-MM-SS	SAMPLE I.D.	MATRIX	NO. OF CONTAINERS	TYPE OF CONTAINERS	TPH gd 8015M	w/ silica gel clean up	VOC 8260	Fuel Oxy 8260	TOC 415.1							
001A 1	9/3/08	740	MW-7-13	Soil	1	Tube	X	X	X	X	X							
002A 2	↓	820	MW-6-12	↓	↓	↓	X	X	X	X	X							
003A 3		1155	MW-4-14				X	X	X	X	X							
004A 4		1405	DP-5-6				X	X	X	X	X							
005A 5		1410	DP-5-12				X	X	X	X	X							
006A 6		1430	DP-5-W	Wtr	~~3~~ 7	~~Amber~~ VOA	X		X	X								
7	~~9/3/08~~	~~1430~~	~~DP-5-W~~	~~Wtr~~	~~1~~	~~Amber~~	X											
007A 8	9/4/08	930	MW-5-12	Soil	1	Tube	X	X	X	X	X							
9																		
10																		
11																		
12																		
13																		
14																		
15																		
16																		
17																		
18																		
19																		
20																		

Question - call
Jeff Gravesen
(925) 580-8302

Relinquished by: (Signature)	Date/Time	Received by: (Signature)
[signature]	9/5 11:02	[signature]
[signature]	9/5 13:00	
		Received for Laboratory by: (Signature)

Instructions/Remarks:
Email
CAlmestad@kleinfelder.com
JGravesen@kleinfelder

Send Results To:
Kleinfelder
1970 Broadway #710
Oakland CA 94612
Attn: Charlie Almestad

ENV-02 REV 05/08)

White – Sampler Canary – Return Copy To Shipper Pink – Lab Copy

CHAIN OF CUSTODY

COC № 11525

Torrent
LABORATORY, INC.

September 28, 2008

Charlie Almestad
KLEINFELDER
1970 Broadway, Suite 710
Oakland, CA 94612

TEL: (510) 628-9000
FAX (510) 628-9009

RE: 95539

Order No.: 0809104

Dear Charlie Almestad:

Torrent Laboratory, Inc. received 8 samples on 9/16/2008 for the analyses presented in the following report.

All data for associated QC met EPA or laboratory specification(s) except where noted in the case narrative.
Reported data is applicable for only the samples received as part of the order number referenced above.

Torrent Laboratory, Inc, is certified by the State of California, ELAP #1991. If you have any questions regarding these tests results, please feel free to contact the Project Management Team at (408)263-5258;ext: 204.

Sincerely,

Laboratory Director

9/28/08
Date

Patti Sandrock
QA Officer

Torrent
LABORATORY, INC.

Torrent Laboratory, Inc. **Date:** *28-Sep-08*

CLIENT: KLEINFELDER
Project: 95539
Lab Order: 0809104

CASE NARRATIVE

Comments for Analytical Method TPH as gasoline by SW846 8015B, Sample 0809104-002A, 003A, 004A, and 008A,Note: Gasoline reported by GCMS. Instrument noramlly used for 8015B analysis was unavailable and any delay in analyis of the submitted samples would have resulted in missed holding times. As a result, EPA approved method SW846 TPH as Gasoline by GCMS was sunstituted. All QC parameteres were met.

483 Sinclair Frontage Rd., Milpitas, CA 95035 | tel: 408.263.5258 | fax: 408.263.8293 | www.torrentlab.com

TORRENT LABORATORY, INC.

483 Sinclair Frontage Road • Milpitas, CA • Phone: (408) 263-5258 • Fax: (408) 263-8293

Visit us at www.torrentlab.com email: analysis@torrentlab.com

Report prepared for: Charlie Almestad
KLEINFELDER

Date Received: 9/16/2008
Date Reported: 9/28/2008

Client Sample ID: MW-1
Sample Location: CTO
Sample Matrix: WATER
Date/Time Sampled 9/16/2008 8:50:00 AM

Lab Sample ID: 0809104-001
Date Prepared: 9/17/2008-9/18/2008

Parameters	Analysis Method	Date Analyzed	RL	Dilution Factor	MRL	Result	Units	Analytical Batch
Total Dissolved Solids (Residue, Filterable)	E160.1	9/17/2008	10	1	10	590	mg/L	R17369
TPH (Diesel)	SW8015B	9/18/2008	0.1	1	0.125	ND	mg/L	R17389
Surr: Pentacosane	SW8015B	9/18/2008	0	1	57.9-125	99.0	%REC	R17389
Note: Reporting limits increased due to limited sample available.								
TPH (Gasoline)	SW8015B	9/17/2008	0.05	1	0.0500	ND	mg/L	R17354
Surr: Trifluorotoluene	SW8015B	9/17/2008	0	1	65-135	109	%REC	R17354

These analyses were performed according to State of California Environmental Laboratory Accreditation program, Certificate # 1991

Report prepared for: Charlie Almestad
KLEINFELDER

Date Received: 9/16/2008
Date Reported: 9/28/2008

Client Sample ID: MW-1
Sample Location: CTO
Sample Matrix: WATER
Date/Time Sampled 9/16/2008 8:50:00 AM

Lab Sample ID: 0809104-001
Date Prepared: 9/17/2008-9/18/2008

Parameters	Analysis Method	Date Analyzed	RL	Dilution Factor	MRL	Result	Units	Analytical Batch
1,1,1,2-Tetrachloroethane	SW8260B	9/24/2008	1	1	1.00	ND	µg/L	R17414
1,1,1-Trichloroethane	SW8260B	9/24/2008	0.5	1	0.50	ND	µg/L	R17414
1,1,2,2-Tetrachloroethane	SW8260B	9/24/2008	1	1	1.00	ND	µg/L	R17414
1,1,2-Trichloroethane	SW8260B	9/24/2008	0.5	1	0.50	ND	µg/L	R17414
1,1-Dichloroethane	SW8260B	9/24/2008	0.5	1	0.50	ND	µg/L	R17414
1,1-Dichloroethene	SW8260B	9/24/2008	1	1	1.00	ND	µg/L	R17414
1,1-Dichloropropene	SW8260B	9/24/2008	0.5	1	0.50	ND	µg/L	R17414
1,2,3-Trichlorobenzene	SW8260B	9/24/2008	6	1	6.00	ND	µg/L	R17414
1,2,3-Trichloropropane	SW8260B	9/24/2008	1	1	1.00	ND	µg/L	R17414
1,2,4-Trichlorobenzene	SW8260B	9/24/2008	6	1	6.00	ND	µg/L	R17414
1,2,4-Trimethylbenzene	SW8260B	9/24/2008	0.5	1	0.50	ND	µg/L	R17414
1,2-Dibromo-3-chloropropane	SW8260B	9/24/2008	0.5	1	0.50	ND	µg/L	R17414
1,2-Dibromoethane (EDB)	SW8260B	9/24/2008	0.5	1	0.50	ND	µg/L	R17414
1,2-Dichlorobenzene	SW8260B	9/24/2008	0.5	1	0.50	ND	µg/L	R17414
1,2-Dichloroethane (EDC)	SW8260B	9/24/2008	0.5	1	0.50	ND	µg/L	R17414
1,2-Dichloropropane	SW8260B	9/24/2008	6	1	6.00	ND	µg/L	R17414
1,3,5-Trimethylbenzene	SW8260B	9/24/2008	0.5	1	0.50	ND	µg/L	R17414
1,3-Dichlorobenzene	SW8260B	9/24/2008	0.5	1	0.50	ND	µg/L	R17414
1,3-Dichloropropene	SW8260B	9/24/2008	0.5	1	0.50	ND	µg/L	R17414
1,4-Dichlorobenzene	SW8260B	9/24/2008	0.5	1	0.50	ND	µg/L	R17414
2,2-Dichloropropane	SW8260B	9/24/2008	0.5	1	0.50	ND	µg/L	R17414
2-Chloroethyl vinyl ether	SW8260B	9/24/2008	1	1	1.00	ND	µg/L	R17414
2-Chlorotoluene	SW8260B	9/24/2008	0.5	1	0.50	ND	µg/L	R17414
4-Chlorotoluene	SW8260B	9/24/2008	0.5	1	0.50	ND	µg/L	R17414
4-Isopropyltoluene	SW8260B	9/24/2008	0.5	1	0.50	ND	µg/L	R17414
Acetone	SW8260B	9/24/2008	10	1	10.0	ND	µg/L	R17414
Benzene	SW8260B	9/24/2008	0.5	1	0.50	ND	µg/L	R17414
Bromobenzene	SW8260B	9/24/2008	0.5	1	0.50	ND	µg/L	R17414
Bromochloromethane	SW8260B	9/24/2008	0.5	1	0.50	ND	µg/L	R17414
Bromodichloromethane	SW8260B	9/24/2008	0.5	1	0.50	ND	µg/L	R17414
Bromoform	SW8260B	9/24/2008	1	1	1.00	ND	µg/L	R17414
Bromomethane	SW8260B	9/24/2008	6	1	6.00	ND	µg/L	R17414
Carbon tetrachloride	SW8260B	9/24/2008	1	1	1.00	ND	µg/L	R17414
Chlorobenzene	SW8260B	9/24/2008	0.5	1	0.50	ND	µg/L	R17414
Chloroform	SW8260B	9/24/2008	0.5	1	0.50	ND	µg/L	R17414
Chloromethane	SW8260B	9/24/2008	0.5	1	0.50	ND	µg/L	R17414
cis-1,2-Dichloroethene	SW8260B	9/24/2008	0.5	1	0.50	ND	µg/L	R17414
cis-1,3-Dichloropropene	SW8260B	9/24/2008	0.5	1	0.50	ND	µg/L	R17414
Dibromochloromethane	SW8260B	9/24/2008	0.5	1	0.50	ND	µg/L	R17414
Dibromomethane	SW8260B	9/24/2008	0.5	1	0.50	ND	µg/L	R17414
Dichlorodifluoromethane	SW8260B	9/24/2008	0.5	1	0.50	ND	µg/L	R17414
Diisopropyl ether (DIPE)	SW8260B	9/24/2008	0.5	1	0.50	ND	µg/L	R17414
Ethyl tert-butyl ether (ETBE)	SW8260B	9/24/2008	0.5	1	0.50	ND	µg/L	R17414

These analyses were performed according to State of California Environmental Laboratory Accreditation program, Certificate # 1991

Report prepared for: Charlie Almestad
KLEINFELDER

Date Received: 9/16/2008
Date Reported: 9/28/2008

Client Sample ID: MW-1
Sample Location: CTO
Sample Matrix: WATER
Date/Time Sampled 9/16/2008 8:50:00 AM

Lab Sample ID: 0809104-001
Date Prepared: 9/17/2008-9/18/2008

Parameters	Analysis Method	Date Analyzed	RL	Dilution Factor	MRL	Result	Units	Analytical Batch
Ethylbenzene	SW8260B	9/24/2008	0.5	1	0.50	ND	µg/L	R17414
Freon-113	SW8260B	9/24/2008	1	1	1.00	ND	µg/L	R17414
Hexachlorobutadiene	SW8260B	9/24/2008	0.5	1	0.50	ND	µg/L	R17414
Isopropylbenzene	SW8260B	9/24/2008	1	1	1.00	ND	µg/L	R17414
Methyl tert-butyl ether (MTBE)	SW8260B	9/24/2008	0.5	1	0.50	ND	µg/L	R17414
Methylene chloride	SW8260B	9/24/2008	5	1	5.00	ND	µg/L	R17414
Naphthalene	SW8260B	9/24/2008	6	1	6.00	ND	µg/L	R17414
n-Butylbenzene	SW8260B	9/24/2008	0.5	1	0.50	ND	µg/L	R17414
n-Propylbenzene	SW8260B	9/24/2008	0.5	1	0.50	ND	µg/L	R17414
sec-Butylbenzene	SW8260B	9/24/2008	0.5	1	0.50	ND	µg/L	R17414
Styrene	SW8260B	9/24/2008	0.5	1	0.50	ND	µg/L	R17414
t-Butyl alcohol (t-Butanol)	SW8260B	9/24/2008	5	1	5.00	ND	µg/L	R17414
tert-Amyl methyl ether (TAME)	SW8260B	9/24/2008	0.5	1	0.50	ND	µg/L	R17414
tert-Butylbenzene	SW8260B	9/24/2008	0.5	1	0.50	ND	µg/L	R17414
Tetrachloroethene	SW8260B	9/24/2008	0.5	1	0.50	ND	µg/L	R17414
Toluene	SW8260B	9/24/2008	0.5	1	0.50	ND	µg/L	R17414
trans-1,2-Dichloroethene	SW8260B	9/24/2008	0.5	1	0.50	ND	µg/L	R17414
trans-1,3-Dichloropropene	SW8260B	9/24/2008	0.5	1	0.50	ND	µg/L	R17414
Trichloroethene	SW8260B	9/24/2008	0.5	1	0.50	ND	µg/L	R17414
Trichlorofluoromethane	SW8260B	9/24/2008	0.5	1	0.50	ND	µg/L	R17414
Vinyl chloride	SW8260B	9/24/2008	0.5	1	0.50	ND	µg/L	R17414
Xylenes, Total	SW8260B	9/24/2008	1.5	1	1.50	ND	µg/L	R17414
Surr: Dibromofluoromethane	SW8260B	9/24/2008	0	1	61.2-131	120	%REC	R17414
Surr: 4-Bromofluorobenzene	SW8260B	9/24/2008	0	1	64.1-120	93.9	%REC	R17414
Surr: Toluene-d8	SW8260B	9/24/2008	0	1	75.1-127	99.4	%REC	R17414

These analyses were performed according to State of California Environmental Laboratory Accreditation program, Certificate # 1991

Report prepared for: Charlie Almestad
KLEINFELDER

Date Received: 9/16/2008
Date Reported: 9/28/2008

Client Sample ID: MW-2
Sample Location: CTO
Sample Matrix: WATER
Date/Time Sampled 9/16/2008 10:30:00 AM

Lab Sample ID: 0809104-002
Date Prepared: 9/17/2008

Parameters	Analysis Method	Date Analyzed	RL	Dilution Factor	MRL	Result	Units	Analytical Batch
Total Dissolved Solids (Residue, Filterable)	E160.1	9/17/2008	10	1	10	600	mg/L	R17369
Nitrate (As N)	E300.0	9/17/2008	0.5	1	0.50	5.2	mg/L	R17366
Nitrite (As N)	E300.0	9/17/2008	0.5	1	0.50	ND	mg/L	R17366
Sulfate	E300.0	9/17/2008	1	25	25	77	mg/L	R17366
Sulfite	E377.1	9/18/2008	2	1	2.0	ND	mg/L	R17385
Iron, Ferrous	SM3500-FE B	9/17/2008	0.1	1	0.10	1.4	mg/L	R17344
TPH (Diesel)	SW8015B	9/19/2008	0.1	4	0.400	2.80x	mg/L	R17389
Surr: Pentacosane	SW8015B	9/19/2008	0	4	57.9-125	100	%REC	R17389

Note: x- Sample chromatogram does not resemble typical diesel pattern (possibly fuel lighter than diesel). Lighter end hydrocarbons and hydrocarbon peaks within the diesel range quantitated as diesel.

These analyses were performed according to State of California Environmental Laboratory Accreditation program, Certificate # 1991

Report prepared for: Charlie Almestad
KLEINFELDER

Date Received: 9/16/2008
Date Reported: 9/28/2008

Client Sample ID: MW-2
Sample Location: CTO
Sample Matrix: WATER
Date/Time Sampled 9/16/2008 10:30:00 AM

Lab Sample ID: 0809104-002
Date Prepared: 9/17/2008

Parameters	Analysis Method	Date Analyzed	RL	Dilution Factor	MRL	Result	Units	Analytical Batch
1,1,1,2-Tetrachloroethane	SW8260B	9/26/2008	1	44	44.0	ND	µg/L	R17429
1,1,1-Trichloroethane	SW8260B	9/26/2008	0.5	44	22.0	ND	µg/L	R17429
1,1,2,2-Tetrachloroethane	SW8260B	9/26/2008	1	44	44.0	ND	µg/L	R17429
1,1,2-Trichloroethane	SW8260B	9/26/2008	0.5	44	22.0	ND	µg/L	R17429
1,1-Dichloroethane	SW8260B	9/26/2008	0.5	44	22.0	ND	µg/L	R17429
1,1-Dichloroethene	SW8260B	9/26/2008	1	44	44.0	ND	µg/L	R17429
1,1-Dichloropropene	SW8260B	9/26/2008	0.5	44	22.0	ND	µg/L	R17429
1,2,3-Trichlorobenzene	SW8260B	9/26/2008	6	44	264	ND	µg/L	R17429
1,2,3-Trichloropropane	SW8260B	9/26/2008	1	44	44.0	ND	µg/L	R17429
1,2,4-Trichlorobenzene	SW8260B	9/26/2008	6	44	264	ND	µg/L	R17429
1,2,4-Trimethylbenzene	SW8260B	9/26/2008	0.5	44	22.0	2120	µg/L	R17429
1,2-Dibromo-3-chloropropane	SW8260B	9/26/2008	0.5	44	22.0	ND	µg/L	R17429
1,2-Dibromoethane (EDB)	SW8260B	9/26/2008	0.5	44	22.0	ND	µg/L	R17429
1,2-Dichlorobenzene	SW8260B	9/26/2008	0.5	44	22.0	ND	µg/L	R17429
1,2-Dichloroethane (EDC)	SW8260B	9/26/2008	0.5	44	22.0	41.4	µg/L	R17429
1,2-Dichloropropane	SW8260B	9/26/2008	6	44	264	ND	µg/L	R17429
1,3,5-Trimethylbenzene	SW8260B	9/26/2008	0.5	44	22.0	410	µg/L	R17429
1,3-Dichlorobenzene	SW8260B	9/26/2008	0.5	44	22.0	ND	µg/L	R17429
1,3-Dichloropropene	SW8260B	9/26/2008	0.5	44	22.0	ND	µg/L	R17429
1,4-Dichlorobenzene	SW8260B	9/26/2008	0.5	44	22.0	ND	µg/L	R17429
2,2-Dichloropropane	SW8260B	9/26/2008	0.5	44	22.0	ND	µg/L	R17429
2-Chloroethyl vinyl ether	SW8260B	9/26/2008	1	44	44.0	ND	µg/L	R17429
2-Chlorotoluene	SW8260B	9/26/2008	0.5	44	22.0	ND	µg/L	R17429
4-Chlorotoluene	SW8260B	9/26/2008	0.5	44	22.0	ND	µg/L	R17429
4-Isopropyltoluene	SW8260B	9/26/2008	0.5	44	22.0	ND	µg/L	R17429
Acetone	SW8260B	9/26/2008	10	44	440	ND	µg/L	R17429
Benzene	SW8260B	9/26/2008	0.5	44	22.0	496	µg/L	R17429
Bromobenzene	SW8260B	9/26/2008	0.5	44	22.0	ND	µg/L	R17429
Bromochloromethane	SW8260B	9/26/2008	0.5	44	22.0	ND	µg/L	R17429
Bromodichloromethane	SW8260B	9/26/2008	0.5	44	22.0	ND	µg/L	R17429
Bromoform	SW8260B	9/26/2008	1	44	44.0	ND	µg/L	R17429
Bromomethane	SW8260B	9/26/2008	6	44	264	ND	µg/L	R17429
Carbon tetrachloride	SW8260B	9/26/2008	1	44	44.0	ND	µg/L	R17429
Chlorobenzene	SW8260B	9/26/2008	0.5	44	22.0	ND	µg/L	R17429
Chloroform	SW8260B	9/26/2008	0.5	44	22.0	ND	µg/L	R17429
Chloromethane	SW8260B	9/26/2008	0.5	44	22.0	ND	µg/L	R17429
cis-1,2-Dichloroethene	SW8260B	9/26/2008	0.5	44	22.0	ND	µg/L	R17429
cis-1,3-Dichloropropene	SW8260B	9/26/2008	0.5	44	22.0	ND	µg/L	R17429
Dibromochloromethane	SW8260B	9/26/2008	0.5	44	22.0	ND	µg/L	R17429
Dibromomethane	SW8260B	9/26/2008	0.5	44	22.0	ND	µg/L	R17429
Dichlorodifluoromethane	SW8260B	9/26/2008	0.5	44	22.0	ND	µg/L	R17429
Diisopropyl ether (DIPE)	SW8260B	9/26/2008	0.5	44	22.0	ND	µg/L	R17429
Ethyl tert-butyl ether (ETBE)	SW8260B	9/26/2008	0.5	44	22.0	ND	µg/L	R17429

These analyses were performed according to State of California Environmental Laboratory Accreditation program, Certificate # 1991

Report prepared for: Charlie Almestad
KLEINFELDER

Date Received: 9/16/2008
Date Reported: 9/28/2008

Client Sample ID: MW-2
Sample Location: CTO
Sample Matrix: WATER
Date/Time Sampled 9/16/2008 10:30:00 AM

Lab Sample ID: 0809104-002
Date Prepared: 9/17/2008

Parameters	Analysis Method	Date Analyzed	RL	Dilution Factor	MRL	Result	Units	Analytical Batch
Ethylbenzene	SW8260B	9/26/2008	0.5	44	22.0	1530	µg/L	R17429
Freon-113	SW8260B	9/26/2008	1	44	44.0	ND	µg/L	R17429
Hexachlorobutadiene	SW8260B	9/26/2008	0.5	44	22.0	ND	µg/L	R17429
Isopropylbenzene	SW8260B	9/26/2008	1	44	44.0	66.0	µg/L	R17429
Methyl tert-butyl ether (MTBE)	SW8260B	9/26/2008	0.5	44	22.0	ND	µg/L	R17429
Methylene chloride	SW8260B	9/26/2008	5	44	220	ND	µg/L	R17429
Naphthalene	SW8260B	9/26/2008	6	44	264	1050	µg/L	R17429
n-Butylbenzene	SW8260B	9/26/2008	0.5	44	22.0	ND	µg/L	R17429
n-Propylbenzene	SW8260B	9/26/2008	0.5	44	22.0	270	µg/L	R17429
sec-Butylbenzene	SW8260B	9/26/2008	0.5	44	22.0	ND	µg/L	R17429
Styrene	SW8260B	9/26/2008	0.5	44	22.0	ND	µg/L	R17429
t-Butyl alcohol (t-Butanol)	SW8260B	9/26/2008	5	44	220	ND	µg/L	R17429
tert-Amyl methyl ether (TAME)	SW8260B	9/26/2008	0.5	44	22.0	ND	µg/L	R17429
tert-Butylbenzene	SW8260B	9/26/2008	0.5	44	22.0	ND	µg/L	R17429
Tetrachloroethene	SW8260B	9/26/2008	0.5	44	22.0	ND	µg/L	R17429
Toluene	SW8260B	9/26/2008	0.5	44	22.0	1710	µg/L	R17429
trans-1,2-Dichloroethene	SW8260B	9/26/2008	0.5	44	22.0	ND	µg/L	R17429
trans-1,3-Dichloropropene	SW8260B	9/26/2008	0.5	44	22.0	ND	µg/L	R17429
Trichloroethene	SW8260B	9/26/2008	0.5	44	22.0	ND	µg/L	R17429
Trichlorofluoromethane	SW8260B	9/26/2008	0.5	44	22.0	ND	µg/L	R17429
Vinyl chloride	SW8260B	9/26/2008	0.5	44	22.0	ND	µg/L	R17429
Xylenes, Total	SW8260B	9/26/2008	1.5	44	66.0	8040	µg/L	R17429
Surr: Dibromofluoromethane	SW8260B	9/26/2008	0	44	61.2-131	92.0	%REC	R17429
Surr: 4-Bromofluorobenzene	SW8260B	9/26/2008	0	44	64.1-120	94.4	%REC	R17429
Surr: Toluene-d8	SW8260B	9/26/2008	0	44	75.1-127	103	%REC	R17429
TPH (Gasoline)	SW8260B(TPH)	9/27/2008	50	44	2200	47000x	µg/L	G17433
Surr: 4-Bromofllurobenzene	SW8260B(TPH)	9/27/2008	0	44	58.4-133	83.7	%REC	G17433

Note: x- Sample chromatogram does not resemble gasoline standard pattern (possibly aged gasoline). Although TPH as Gasoline constituents are present, TPH value includes heavy end non-target gasoline compounds within range of C5-C12 quantified as Gasoline

These analyses were performed according to State of California Environmental Laboratory Accreditation program, Certificate # 1991

Report prepared for: Charlie Almestad
KLEINFELDER

Date Received: 9/16/2008
Date Reported: 9/28/2008

Client Sample ID: MW-3
Sample Location: CTO
Sample Matrix: WATER
Date/Time Sampled 9/16/2008 11:50:00 AM

Lab Sample ID: 0809104-003
Date Prepared: 9/18/2008

Parameters	Analysis Method	Date Analyzed	RL	Dilution Factor	MRL	Result	Units	Analytical Batch
Total Dissolved Solids (Residue, Filterable)	E160.1	9/17/2008	10	1	10	430	mg/L	R17369
TPH (Diesel)	SW8015B	9/18/2008	0.1	1	0.125	ND	mg/L	R17389
Surr: Pentacosane	SW8015B	9/18/2008	0	1	57.9-125	99.0	%REC	R17389

Note: Reporting limits increased due to limited sample available.

These analyses were performed according to State of California Environmental Laboratory Accreditation program, Certificate # 1991

Report prepared for: Charlie Almestad
KLEINFELDER

Date Received: 9/16/2008
Date Reported: 9/28/2008

Client Sample ID: MW-3
Sample Location: CTO
Sample Matrix: WATER
Date/Time Sampled 9/16/2008 11:50:00 AM

Lab Sample ID: 0809104-003
Date Prepared: 9/18/2008

Parameters	Analysis Method	Date Analyzed	RL	Dilution Factor	MRL	Result	Units	Analytical Batch
1,1,1,2-Tetrachloroethane	SW8260B	9/25/2008	1	1	1.00	ND	µg/L	R17429
1,1,1-Trichloroethane	SW8260B	9/25/2008	0.5	1	0.50	ND	µg/L	R17429
1,1,2,2-Tetrachloroethane	SW8260B	9/25/2008	1	1	1.00	ND	µg/L	R17429
1,1,2-Trichloroethane	SW8260B	9/25/2008	0.5	1	0.50	ND	µg/L	R17429
1,1-Dichloroethane	SW8260B	9/25/2008	0.5	1	0.50	ND	µg/L	R17429
1,1-Dichloroethene	SW8260B	9/25/2008	1	1	1.00	ND	µg/L	R17429
1,1-Dichloropropene	SW8260B	9/25/2008	0.5	1	0.50	ND	µg/L	R17429
1,2,3-Trichlorobenzene	SW8260B	9/25/2008	6	1	6.00	ND	µg/L	R17429
1,2,3-Trichloropropane	SW8260B	9/25/2008	1	1	1.00	ND	µg/L	R17429
1,2,4-Trichlorobenzene	SW8260B	9/25/2008	6	1	6.00	ND	µg/L	R17429
1,2,4-Trimethylbenzene	SW8260B	9/25/2008	0.5	1	0.50	ND	µg/L	R17429
1,2-Dibromo-3-chloropropane	SW8260B	9/25/2008	0.5	1	0.50	ND	µg/L	R17429
1,2-Dibromoethane (EDB)	SW8260B	9/25/2008	0.5	1	0.50	ND	µg/L	R17429
1,2-Dichlorobenzene	SW8260B	9/25/2008	0.5	1	0.50	ND	µg/L	R17429
1,2-Dichloroethane (EDC)	SW8260B	9/25/2008	0.5	1	0.50	ND	µg/L	R17429
1,2-Dichloropropane	SW8260B	9/25/2008	6	1	6.00	ND	µg/L	R17429
1,3,5-Trimethylbenzene	SW8260B	9/25/2008	0.5	1	0.50	ND	µg/L	R17429
1,3-Dichlorobenzene	SW8260B	9/25/2008	0.5	1	0.50	ND	µg/L	R17429
1,3-Dichloropropene	SW8260B	9/25/2008	0.5	1	0.50	ND	µg/L	R17429
1,4-Dichlorobenzene	SW8260B	9/25/2008	0.5	1	0.50	ND	µg/L	R17429
2,2-Dichloropropane	SW8260B	9/25/2008	0.5	1	0.50	ND	µg/L	R17429
2-Chloroethyl vinyl ether	SW8260B	9/25/2008	1	1	1.00	ND	µg/L	R17429
2-Chlorotoluene	SW8260B	9/25/2008	0.5	1	0.50	ND	µg/L	R17429
4-Chlorotoluene	SW8260B	9/25/2008	0.5	1	0.50	ND	µg/L	R17429
4-Isopropyltoluene	SW8260B	9/25/2008	0.5	1	0.50	ND	µg/L	R17429
Acetone	SW8260B	9/25/2008	10	1	10.0	ND	µg/L	R17429
Benzene	SW8260B	9/25/2008	0.5	1	0.50	ND	µg/L	R17429
Bromobenzene	SW8260B	9/25/2008	0.5	1	0.50	ND	µg/L	R17429
Bromochloromethane	SW8260B	9/25/2008	0.5	1	0.50	ND	µg/L	R17429
Bromodichloromethane	SW8260B	9/25/2008	0.5	1	0.50	ND	µg/L	R17429
Bromoform	SW8260B	9/25/2008	1	1	1.00	ND	µg/L	R17429
Bromomethane	SW8260B	9/25/2008	6	1	6.00	ND	µg/L	R17429
Carbon tetrachloride	SW8260B	9/25/2008	1	1	1.00	ND	µg/L	R17429
Chlorobenzene	SW8260B	9/25/2008	0.5	1	0.50	ND	µg/L	R17429
Chloroform	SW8260B	9/25/2008	0.5	1	0.50	ND	µg/L	R17429
Chloromethane	SW8260B	9/25/2008	0.5	1	0.50	ND	µg/L	R17429
cis-1,2-Dichloroethene	SW8260B	9/25/2008	0.5	1	0.50	ND	µg/L	R17429
cis-1,3-Dichloropropene	SW8260B	9/25/2008	0.5	1	0.50	ND	µg/L	R17429
Dibromochloromethane	SW8260B	9/25/2008	0.5	1	0.50	ND	µg/L	R17429
Dibromomethane	SW8260B	9/25/2008	0.5	1	0.50	ND	µg/L	R17429
Dichlorodifluoromethane	SW8260B	9/25/2008	0.5	1	0.50	ND	µg/L	R17429
Diisopropyl ether (DIPE)	SW8260B	9/25/2008	0.5	1	0.50	ND	µg/L	R17429
Ethyl tert-butyl ether (ETBE)	SW8260B	9/25/2008	0.5	1	0.50	ND	µg/L	R17429

These analyses were performed according to State of California Environmental Laboratory Accreditation program, Certificate # 1991

Report prepared for: Charlie Almestad
KLEINFELDER

Date Received: 9/16/2008
Date Reported: 9/28/2008

Client Sample ID: MW-3
Sample Location: CTO
Sample Matrix: WATER
Date/Time Sampled 9/16/2008 11:50:00 AM

Lab Sample ID: 0809104-003
Date Prepared: 9/18/2008

Parameters	Analysis Method	Date Analyzed	RL	Dilution Factor	MRL	Result	Units	Analytical Batch
Ethylbenzene	SW8260B	9/25/2008	0.5	1	0.50	ND	µg/L	R17429
Freon-113	SW8260B	9/25/2008	1	1	1.00	ND	µg/L	R17429
Hexachlorobutadiene	SW8260B	9/25/2008	0.5	1	0.50	ND	µg/L	R17429
Isopropylbenzene	SW8260B	9/25/2008	1	1	1.00	ND	µg/L	R17429
Methyl tert-butyl ether (MTBE)	SW8260B	9/25/2008	0.5	1	0.50	ND	µg/L	R17429
Methylene chloride	SW8260B	9/25/2008	5	1	5.00	ND	µg/L	R17429
Naphthalene	SW8260B	9/25/2008	6	1	6.00	ND	µg/L	R17429
n-Butylbenzene	SW8260B	9/25/2008	0.5	1	0.50	ND	µg/L	R17429
n-Propylbenzene	SW8260B	9/25/2008	0.5	1	0.50	ND	µg/L	R17429
sec-Butylbenzene	SW8260B	9/25/2008	0.5	1	0.50	ND	µg/L	R17429
Styrene	SW8260B	9/25/2008	0.5	1	0.50	ND	µg/L	R17429
t-Butyl alcohol (t-Butanol)	SW8260B	9/25/2008	5	1	5.00	ND	µg/L	R17429
tert-Amyl methyl ether (TAME)	SW8260B	9/25/2008	0.5	1	0.50	ND	µg/L	R17429
tert-Butylbenzene	SW8260B	9/25/2008	0.5	1	0.50	ND	µg/L	R17429
Tetrachloroethene	SW8260B	9/25/2008	0.5	1	0.50	ND	µg/L	R17429
Toluene	SW8260B	9/25/2008	0.5	1	0.50	ND	µg/L	R17429
trans-1,2-Dichloroethene	SW8260B	9/25/2008	0.5	1	0.50	ND	µg/L	R17429
trans-1,3-Dichloropropene	SW8260B	9/25/2008	0.5	1	0.50	ND	µg/L	R17429
Trichloroethene	SW8260B	9/25/2008	0.5	1	0.50	ND	µg/L	R17429
Trichlorofluoromethane	SW8260B	9/25/2008	0.5	1	0.50	ND	µg/L	R17429
Vinyl chloride	SW8260B	9/25/2008	0.5	1	0.50	ND	µg/L	R17429
Xylenes, Total	SW8260B	9/25/2008	1.5	1	1.50	ND	µg/L	R17429
Surr: Dibromofluoromethane	SW8260B	9/25/2008	0	1	61.2-131	94.8	%REC	R17429
Surr: 4-Bromofluorobenzene	SW8260B	9/25/2008	0	1	64.1-120	96.0	%REC	R17429
Surr: Toluene-d8	SW8260B	9/25/2008	0	1	75.1-127	109	%REC	R17429
TPH (Gasoline)	SW8260B(TPH)	9/27/2008	50	1	50	ND	µg/L	G17433
Surr: 4-Bromofllurobenzene	SW8260B(TPH)	9/27/2008	0	1	58.4-133	101	%REC	G17433

These analyses were performed according to State of California Environmental Laboratory Accreditation program, Certificate # 1991

Report prepared for: Charlie Almestad
KLEINFELDER

Date Received: 9/16/2008
Date Reported: 9/28/2008

Client Sample ID: MW-4
Sample Location: CTO
Sample Matrix: WATER
Date/Time Sampled 9/16/2008 9:50:00 AM

Lab Sample ID: 0809104-004
Date Prepared: 9/17/2008

Parameters	Analysis Method	Date Analyzed	RL	Dilution Factor	MRL	Result	Units	Analytical Batch
Total Dissolved Solids (Residue, Filterable)	E160.1	9/17/2008	10	1	10	900	mg/L	R17369
Nitrate (As N)	E300.0	9/17/2008	0.5	1	0.50	20	mg/L	R17366
Nitrite (As N)	E300.0	9/17/2008	0.5	1	0.50	ND	mg/L	R17366
Sulfate	E300.0	9/17/2008	1	50	50	180	mg/L	R17366
Sulfite	E377.1	9/18/2008	2	1	2.0	ND	mg/L	R17385
Iron, Ferrous	SM3500-FE B	9/17/2008	0.1	1	0.10	ND	mg/L	R17344
TPH (Diesel)	SW8015B	9/19/2008	0.1	1	0.100	ND	mg/L	R17389
Surr: Pentacosane	SW8015B	9/19/2008	0	1	57.9-125	101	%REC	R17389

These analyses were performed according to State of California Environmental Laboratory Accreditation program, Certificate # 1991

Report prepared for: Charlie Almestad
KLEINFELDER

Date Received: 9/16/2008
Date Reported: 9/28/2008

Client Sample ID: MW-4
Sample Location: CTO
Sample Matrix: WATER
Date/Time Sampled 9/16/2008 9:50:00 AM

Lab Sample ID: 0809104-004
Date Prepared: 9/17/2008

Parameters	Analysis Method	Date Analyzed	RL	Dilution Factor	MRL	Result	Units	Analytical Batch
1,1,1,2-Tetrachloroethane	SW8260B	9/25/2008	1	1	1.00	ND	µg/L	R17429
1,1,1-Trichloroethane	SW8260B	9/25/2008	0.5	1	0.50	ND	µg/L	R17429
1,1,2,2-Tetrachloroethane	SW8260B	9/25/2008	1	1	1.00	ND	µg/L	R17429
1,1,2-Trichloroethane	SW8260B	9/25/2008	0.5	1	0.50	ND	µg/L	R17429
1,1-Dichloroethane	SW8260B	9/25/2008	0.5	1	0.50	ND	µg/L	R17429
1,1-Dichloroethene	SW8260B	9/25/2008	1	1	1.00	ND	µg/L	R17429
1,1-Dichloropropene	SW8260B	9/25/2008	0.5	1	0.50	ND	µg/L	R17429
1,2,3-Trichlorobenzene	SW8260B	9/25/2008	6	1	6.00	ND	µg/L	R17429
1,2,3-Trichloropropane	SW8260B	9/25/2008	1	1	1.00	ND	µg/L	R17429
1,2,4-Trichlorobenzene	SW8260B	9/25/2008	6	1	6.00	ND	µg/L	R17429
1,2,4-Trimethylbenzene	SW8260B	9/25/2008	0.5	1	0.50	ND	µg/L	R17429
1,2-Dibromo-3-chloropropane	SW8260B	9/25/2008	0.5	1	0.50	ND	µg/L	R17429
1,2-Dibromoethane (EDB)	SW8260B	9/25/2008	0.5	1	0.50	ND	µg/L	R17429
1,2-Dichlorobenzene	SW8260B	9/25/2008	0.5	1	0.50	ND	µg/L	R17429
1,2-Dichloroethane (EDC)	SW8260B	9/25/2008	0.5	1	0.50	ND	µg/L	R17429
1,2-Dichloropropane	SW8260B	9/25/2008	6	1	6.00	ND	µg/L	R17429
1,3,5-Trimethylbenzene	SW8260B	9/25/2008	0.5	1	0.50	ND	µg/L	R17429
1,3-Dichlorobenzene	SW8260B	9/25/2008	0.5	1	0.50	ND	µg/L	R17429
1,3-Dichloropropene	SW8260B	9/25/2008	0.5	1	0.50	ND	µg/L	R17429
1,4-Dichlorobenzene	SW8260B	9/25/2008	0.5	1	0.50	ND	µg/L	R17429
2,2-Dichloropropane	SW8260B	9/25/2008	0.5	1	0.50	ND	µg/L	R17429
2-Chloroethyl vinyl ether	SW8260B	9/25/2008	1	1	1.00	ND	µg/L	R17429
2-Chlorotoluene	SW8260B	9/25/2008	0.5	1	0.50	ND	µg/L	R17429
4-Chlorotoluene	SW8260B	9/25/2008	0.5	1	0.50	ND	µg/L	R17429
4-Isopropyltoluene	SW8260B	9/25/2008	0.5	1	0.50	ND	µg/L	R17429
Acetone	SW8260B	9/25/2008	10	1	10.0	ND	µg/L	R17429
Benzene	SW8260B	9/25/2008	0.5	1	0.50	ND	µg/L	R17429
Bromobenzene	SW8260B	9/25/2008	0.5	1	0.50	ND	µg/L	R17429
Bromochloromethane	SW8260B	9/25/2008	0.5	1	0.50	ND	µg/L	R17429
Bromodichloromethane	SW8260B	9/25/2008	0.5	1	0.50	ND	µg/L	R17429
Bromoform	SW8260B	9/25/2008	1	1	1.00	ND	µg/L	R17429
Bromomethane	SW8260B	9/25/2008	6	1	6.00	ND	µg/L	R17429
Carbon tetrachloride	SW8260B	9/25/2008	1	1	1.00	ND	µg/L	R17429
Chlorobenzene	SW8260B	9/25/2008	0.5	1	0.50	ND	µg/L	R17429
Chloroform	SW8260B	9/25/2008	0.5	1	0.50	ND	µg/L	R17429
Chloromethane	SW8260B	9/25/2008	0.5	1	0.50	ND	µg/L	R17429
cis-1,2-Dichloroethene	SW8260B	9/25/2008	0.5	1	0.50	ND	µg/L	R17429
cis-1,3-Dichloropropene	SW8260B	9/25/2008	0.5	1	0.50	ND	µg/L	R17429
Dibromochloromethane	SW8260B	9/25/2008	0.5	1	0.50	ND	µg/L	R17429
Dibromomethane	SW8260B	9/25/2008	0.5	1	0.50	ND	µg/L	R17429
Dichlorodifluoromethane	SW8260B	9/25/2008	0.5	1	0.50	ND	µg/L	R17429
Diisopropyl ether (DIPE)	SW8260B	9/25/2008	0.5	1	0.50	ND	µg/L	R17429
Ethyl tert-butyl ether (ETBE)	SW8260B	9/25/2008	0.5	1	0.50	ND	µg/L	R17429

These analyses were performed according to State of California Environmental Laboratory Accreditation program, Certificate # 1991

Report prepared for: Charlie Almestad
KLEINFELDER

Date Received: 9/16/2008
Date Reported: 9/28/2008

Client Sample ID: MW-4
Sample Location: CTO
Sample Matrix: WATER
Date/Time Sampled 9/16/2008 9:50:00 AM

Lab Sample ID: 0809104-004
Date Prepared: 9/17/2008

Parameters	Analysis Method	Date Analyzed	RL	Dilution Factor	MRL	Result	Units	Analytical Batch
Ethylbenzene	SW8260B	9/25/2008	0.5	1	0.50	ND	µg/L	R17429
Freon-113	SW8260B	9/25/2008	1	1	1.00	ND	µg/L	R17429
Hexachlorobutadiene	SW8260B	9/25/2008	0.5	1	0.50	ND	µg/L	R17429
Isopropylbenzene	SW8260B	9/25/2008	1	1	1.00	ND	µg/L	R17429
Methyl tert-butyl ether (MTBE)	SW8260B	9/25/2008	0.5	1	0.50	ND	µg/L	R17429
Methylene chloride	SW8260B	9/25/2008	5	1	5.00	ND	µg/L	R17429
Naphthalene	SW8260B	9/25/2008	6	1	6.00	ND	µg/L	R17429
n-Butylbenzene	SW8260B	9/25/2008	0.5	1	0.50	ND	µg/L	R17429
n-Propylbenzene	SW8260B	9/25/2008	0.5	1	0.50	ND	µg/L	R17429
sec-Butylbenzene	SW8260B	9/25/2008	0.5	1	0.50	ND	µg/L	R17429
Styrene	SW8260B	9/25/2008	0.5	1	0.50	ND	µg/L	R17429
t-Butyl alcohol (t-Butanol)	SW8260B	9/25/2008	5	1	5.00	ND	µg/L	R17429
tert-Amyl methyl ether (TAME)	SW8260B	9/25/2008	0.5	1	0.50	ND	µg/L	R17429
tert-Butylbenzene	SW8260B	9/25/2008	0.5	1	0.50	ND	µg/L	R17429
Tetrachloroethene	SW8260B	9/25/2008	0.5	1	0.50	ND	µg/L	R17429
Toluene	SW8260B	9/25/2008	0.5	1	0.50	ND	µg/L	R17429
trans-1,2-Dichloroethene	SW8260B	9/25/2008	0.5	1	0.50	ND	µg/L	R17429
trans-1,3-Dichloropropene	SW8260B	9/25/2008	0.5	1	0.50	ND	µg/L	R17429
Trichloroethene	SW8260B	9/25/2008	0.5	1	0.50	0.92	µg/L	R17429
Trichlorofluoromethane	SW8260B	9/25/2008	0.5	1	0.50	ND	µg/L	R17429
Vinyl chloride	SW8260B	9/25/2008	0.5	1	0.50	ND	µg/L	R17429
Xylenes, Total	SW8260B	9/25/2008	1.5	1	1.50	ND	µg/L	R17429
Surr: Dibromofluoromethane	SW8260B	9/25/2008	0	1	61.2-131	106	%REC	R17429
Surr: 4-Bromofluorobenzene	SW8260B	9/25/2008	0	1	64.1-120	91.3	%REC	R17429
Surr: Toluene-d8	SW8260B	9/25/2008	0	1	75.1-127	92.0	%REC	R17429
TPH (Gasoline)	SW8260B(TPH)	9/27/2008	50	1	50	ND	µg/L	G17433
Surr: 4-Bromofllurobenzene	SW8260B(TPH)	9/27/2008	0	1	58.4-133	96.2	%REC	G17433

These analyses were performed according to State of California Environmental Laboratory Accreditation program, Certificate # 1991

Report prepared for: Charlie Almestad
KLEINFELDER

Date Received: 9/16/2008
Date Reported: 9/28/2008

Client Sample ID: MW-5
Sample Location: CTO
Sample Matrix: WATER
Date/Time Sampled 9/16/2008 11:20:00 AM

Lab Sample ID: 0809104-005
Date Prepared: 9/17/2008

Parameters	Analysis Method	Date Analyzed	RL	Dilution Factor	MRL	Result	Units	Analytical Batch
Total Dissolved Solids (Residue, Filterable)	E160.1	9/17/2008	10	1	10	750	mg/L	R17369
Nitrate (As N)	E300.0	9/17/2008	0.5	1	0.50	2.4	mg/L	R17366
Nitrite (As N)	E300.0	9/17/2008	0.5	1	0.50	ND	mg/L	R17366
Sulfate	E300.0	9/17/2008	1	50	50	240	mg/L	R17366
Sulfite	E377.1	9/18/2008	2	1	2.0	ND	mg/L	R17385
Iron, Ferrous	SM3500-FE B	9/17/2008	0.1	1	0.10	ND	mg/L	R17344
TPH (Diesel)	SW8015B	9/19/2008	0.1	1	0.100	ND	mg/L	R17389
Surr: Pentacosane	SW8015B	9/19/2008	0	1	57.9-125	101	%REC	R17389
TPH (Gasoline)	SW8015B	9/18/2008	0.05	1	0.0500	ND	mg/L	R17354
Surr: Trifluorotoluene	SW8015B	9/18/2008	0	1	65-135	117	%REC	R17354

These analyses were performed according to State of California Environmental Laboratory Accreditation program, Certificate # 1991

Report prepared for: Charlie Almestad
KLEINFELDER

Date Received: 9/16/2008
Date Reported: 9/28/2008

Client Sample ID: MW-5
Sample Location: CTO
Sample Matrix: WATER
Date/Time Sampled 9/16/2008 11:20:00 AM

Lab Sample ID: 0809104-005
Date Prepared: 9/17/2008

Parameters	Analysis Method	Date Analyzed	RL	Dilution Factor	MRL	Result	Units	Analytical Batch
1,1,1,2-Tetrachloroethane	SW8260B	9/24/2008	1	1.19	1.19	ND	µg/L	R17414
1,1,1-Trichloroethane	SW8260B	9/24/2008	0.5	1.19	0.60	ND	µg/L	R17414
1,1,2,2-Tetrachloroethane	SW8260B	9/24/2008	1	1.19	1.19	ND	µg/L	R17414
1,1,2-Trichloroethane	SW8260B	9/24/2008	0.5	1.19	0.60	ND	µg/L	R17414
1,1-Dichloroethane	SW8260B	9/24/2008	0.5	1.19	0.60	ND	µg/L	R17414
1,1-Dichloroethene	SW8260B	9/24/2008	1	1.19	1.19	ND	µg/L	R17414
1,1-Dichloropropene	SW8260B	9/24/2008	0.5	1.19	0.60	ND	µg/L	R17414
1,2,3-Trichlorobenzene	SW8260B	9/24/2008	6	1.19	7.14	ND	µg/L	R17414
1,2,3-Trichloropropane	SW8260B	9/24/2008	1	1.19	1.19	ND	µg/L	R17414
1,2,4-Trichlorobenzene	SW8260B	9/24/2008	6	1.19	7.14	ND	µg/L	R17414
1,2,4-Trimethylbenzene	SW8260B	9/24/2008	0.5	1.19	0.60	ND	µg/L	R17414
1,2-Dibromo-3-chloropropane	SW8260B	9/24/2008	0.5	1.19	0.60	ND	µg/L	R17414
1,2-Dibromoethane (EDB)	SW8260B	9/24/2008	0.5	1.19	0.60	ND	µg/L	R17414
1,2-Dichlorobenzene	SW8260B	9/24/2008	0.5	1.19	0.60	ND	µg/L	R17414
1,2-Dichloroethane (EDC)	SW8260B	9/24/2008	0.5	1.19	0.60	ND	µg/L	R17414
1,2-Dichloropropane	SW8260B	9/24/2008	6	1.19	7.14	ND	µg/L	R17414
1,3,5-Trimethylbenzene	SW8260B	9/24/2008	0.5	1.19	0.60	ND	µg/L	R17414
1,3-Dichlorobenzene	SW8260B	9/24/2008	0.5	1.19	0.60	ND	µg/L	R17414
1,3-Dichloropropene	SW8260B	9/24/2008	0.5	1.19	0.60	ND	µg/L	R17414
1,4-Dichlorobenzene	SW8260B	9/24/2008	0.5	1.19	0.60	ND	µg/L	R17414
2,2-Dichloropropane	SW8260B	9/24/2008	0.5	1.19	0.60	ND	µg/L	R17414
2-Chloroethyl vinyl ether	SW8260B	9/24/2008	1	1.19	1.19	ND	µg/L	R17414
2-Chlorotoluene	SW8260B	9/24/2008	0.5	1.19	0.60	ND	µg/L	R17414
4-Chlorotoluene	SW8260B	9/24/2008	0.5	1.19	0.60	ND	µg/L	R17414
4-Isopropyltoluene	SW8260B	9/24/2008	0.5	1.19	0.60	ND	µg/L	R17414
Acetone	SW8260B	9/24/2008	10	1.19	11.9	ND	µg/L	R17414
Benzene	SW8260B	9/24/2008	0.5	1.19	0.60	ND	µg/L	R17414
Bromobenzene	SW8260B	9/24/2008	0.5	1.19	0.60	ND	µg/L	R17414
Bromochloromethane	SW8260B	9/24/2008	0.5	1.19	0.60	ND	µg/L	R17414
Bromodichloromethane	SW8260B	9/24/2008	0.5	1.19	0.60	ND	µg/L	R17414
Bromoform	SW8260B	9/24/2008	1	1.19	1.19	ND	µg/L	R17414
Bromomethane	SW8260B	9/24/2008	6	1.19	7.14	ND	µg/L	R17414
Carbon tetrachloride	SW8260B	9/24/2008	1	1.19	1.19	ND	µg/L	R17414
Chlorobenzene	SW8260B	9/24/2008	0.5	1.19	0.60	ND	µg/L	R17414
Chloroform	SW8260B	9/24/2008	0.5	1.19	0.60	ND	µg/L	R17414
Chloromethane	SW8260B	9/24/2008	0.5	1.19	0.60	ND	µg/L	R17414
cis-1,2-Dichloroethene	SW8260B	9/24/2008	0.5	1.19	0.60	ND	µg/L	R17414
cis-1,3-Dichloropropene	SW8260B	9/24/2008	0.5	1.19	0.60	ND	µg/L	R17414
Dibromochloromethane	SW8260B	9/24/2008	0.5	1.19	0.60	ND	µg/L	R17414
Dibromomethane	SW8260B	9/24/2008	0.5	1.19	0.60	ND	µg/L	R17414
Dichlorodifluoromethane	SW8260B	9/24/2008	0.5	1.19	0.60	ND	µg/L	R17414
Diisopropyl ether (DIPE)	SW8260B	9/24/2008	0.5	1.19	0.60	ND	µg/L	R17414
Ethyl tert-butyl ether (ETBE)	SW8260B	9/24/2008	0.5	1.19	0.60	ND	µg/L	R17414

These analyses were performed according to State of California Environmental Laboratory Accreditation program, Certificate # 1991

Report prepared for: Charlie Almestad
KLEINFELDER

Date Received: 9/16/2008
Date Reported: 9/28/2008

Client Sample ID: MW-5
Sample Location: CTO
Sample Matrix: WATER
Date/Time Sampled 9/16/2008 11:20:00 AM

Lab Sample ID: 0809104-005
Date Prepared: 9/17/2008

Parameters	Analysis Method	Date Analyzed	RL	Dilution Factor	MRL	Result	Units	Analytical Batch
Ethylbenzene	SW8260B	9/24/2008	0.5	1.19	0.60	ND	µg/L	R17414
Freon-113	SW8260B	9/24/2008	1	1.19	1.19	ND	µg/L	R17414
Hexachlorobutadiene	SW8260B	9/24/2008	0.5	1.19	0.60	ND	µg/L	R17414
Isopropylbenzene	SW8260B	9/24/2008	1	1.19	1.19	ND	µg/L	R17414
Methyl tert-butyl ether (MTBE)	SW8260B	9/24/2008	0.5	1.19	0.60	ND	µg/L	R17414
Methylene chloride	SW8260B	9/24/2008	5	1.19	5.95	ND	µg/L	R17414
Naphthalene	SW8260B	9/24/2008	6	1.19	7.14	ND	µg/L	R17414
n-Butylbenzene	SW8260B	9/24/2008	0.5	1.19	0.60	ND	µg/L	R17414
n-Propylbenzene	SW8260B	9/24/2008	0.5	1.19	0.60	ND	µg/L	R17414
sec-Butylbenzene	SW8260B	9/24/2008	0.5	1.19	0.60	ND	µg/L	R17414
Styrene	SW8260B	9/24/2008	0.5	1.19	0.60	ND	µg/L	R17414
t-Butyl alcohol (t-Butanol)	SW8260B	9/24/2008	5	1.19	5.95	ND	µg/L	R17414
tert-Amyl methyl ether (TAME)	SW8260B	9/24/2008	0.5	1.19	0.60	ND	µg/L	R17414
tert-Butylbenzene	SW8260B	9/24/2008	0.5	1.19	0.60	ND	µg/L	R17414
Tetrachloroethene	SW8260B	9/24/2008	0.5	1.19	0.60	ND	µg/L	R17414
Toluene	SW8260B	9/24/2008	0.5	1.19	0.60	ND	µg/L	R17414
trans-1,2-Dichloroethene	SW8260B	9/24/2008	0.5	1.19	0.60	ND	µg/L	R17414
trans-1,3-Dichloropropene	SW8260B	9/24/2008	0.5	1.19	0.60	ND	µg/L	R17414
Trichloroethene	SW8260B	9/24/2008	0.5	1.19	0.60	ND	µg/L	R17414
Trichlorofluoromethane	SW8260B	9/24/2008	0.5	1.19	0.60	ND	µg/L	R17414
Vinyl chloride	SW8260B	9/24/2008	0.5	1.19	0.60	ND	µg/L	R17414
Xylenes, Total	SW8260B	9/24/2008	1.5	1.19	1.79	ND	µg/L	R17414
Surr: Dibromofluoromethane	SW8260B	9/24/2008	0	1.19	61.2-131	116	%REC	R17414
Surr: 4-Bromofluorobenzene	SW8260B	9/24/2008	0	1.19	64.1-120	96.5	%REC	R17414
Surr: Toluene-d8	SW8260B	9/24/2008	0	1.19	75.1-127	101	%REC	R17414

Note: Sample was diluted prior to analysis due to sediment in all voas.

These analyses were performed according to State of California Environmental Laboratory Accreditation program, Certificate # 1991

Report prepared for: Charlie Almestad
KLEINFELDER

Date Received: 9/16/2008
Date Reported: 9/28/2008

Client Sample ID: MW-6
Sample Location: CTO
Sample Matrix: WATER
Date/Time Sampled 9/16/2008 12:35:00 PM

Lab Sample ID: 0809104-006
Date Prepared: 9/18/2008

Parameters	Analysis Method	Date Analyzed	RL	Dilution Factor	MRL	Result	Units	Analytical Batch
Total Dissolved Solids (Residue, Filterable)	E160.1	9/17/2008	10	1	10	540	mg/L	R17369
TPH (Diesel)	SW8015B	9/19/2008	0.1	1	0.122	ND	mg/L	R17389
Surr: Pentacosane	SW8015B	9/19/2008	0	1	57.9-125	102	%REC	R17389
Note: Reporting limits increased due to limited sample available.								
TPH (Gasoline)	SW8015B	9/18/2008	0.05	1	0.0500	ND	mg/L	R17354
Surr: Trifluorotoluene	SW8015B	9/18/2008	0	1	65-135	104	%REC	R17354

These analyses were performed according to State of California Environmental Laboratory Accreditation program, Certificate # 1991

Report prepared for: Charlie Almestad
KLEINFELDER

Date Received: 9/16/2008
Date Reported: 9/28/2008

Client Sample ID: MW-6
Sample Location: CTO
Sample Matrix: WATER
Date/Time Sampled 9/16/2008 12:35:00 PM

Lab Sample ID: 0809104-006
Date Prepared: 9/18/2008

Parameters	Analysis Method	Date Analyzed	RL	Dilution Factor	MRL	Result	Units	Analytical Batch
1,1,1,2-Tetrachloroethane	SW8260B	9/24/2008	1	1	1.00	ND	µg/L	R17414
1,1,1-Trichloroethane	SW8260B	9/24/2008	0.5	1	0.50	ND	µg/L	R17414
1,1,2,2-Tetrachloroethane	SW8260B	9/24/2008	1	1	1.00	ND	µg/L	R17414
1,1,2-Trichloroethane	SW8260B	9/24/2008	0.5	1	0.50	ND	µg/L	R17414
1,1-Dichloroethane	SW8260B	9/24/2008	0.5	1	0.50	ND	µg/L	R17414
1,1-Dichloroethene	SW8260B	9/24/2008	1	1	1.00	ND	µg/L	R17414
1,1-Dichloropropene	SW8260B	9/24/2008	0.5	1	0.50	ND	µg/L	R17414
1,2,3-Trichlorobenzene	SW8260B	9/24/2008	6	1	6.00	ND	µg/L	R17414
1,2,3-Trichloropropane	SW8260B	9/24/2008	1	1	1.00	ND	µg/L	R17414
1,2,4-Trichlorobenzene	SW8260B	9/24/2008	6	1	6.00	ND	µg/L	R17414
1,2,4-Trimethylbenzene	SW8260B	9/24/2008	0.5	1	0.50	ND	µg/L	R17414
1,2-Dibromo-3-chloropropane	SW8260B	9/24/2008	0.5	1	0.50	ND	µg/L	R17414
1,2-Dibromoethane (EDB)	SW8260B	9/24/2008	0.5	1	0.50	ND	µg/L	R17414
1,2-Dichlorobenzene	SW8260B	9/24/2008	0.5	1	0.50	ND	µg/L	R17414
1,2-Dichloroethane (EDC)	SW8260B	9/24/2008	0.5	1	0.50	ND	µg/L	R17414
1,2-Dichloropropane	SW8260B	9/24/2008	6	1	6.00	ND	µg/L	R17414
1,3,5-Trimethylbenzene	SW8260B	9/24/2008	0.5	1	0.50	ND	µg/L	R17414
1,3-Dichlorobenzene	SW8260B	9/24/2008	0.5	1	0.50	ND	µg/L	R17414
1,3-Dichloropropene	SW8260B	9/24/2008	0.5	1	0.50	ND	µg/L	R17414
1,4-Dichlorobenzene	SW8260B	9/24/2008	0.5	1	0.50	ND	µg/L	R17414
2,2-Dichloropropane	SW8260B	9/24/2008	0.5	1	0.50	ND	µg/L	R17414
2-Chloroethyl vinyl ether	SW8260B	9/24/2008	1	1	1.00	ND	µg/L	R17414
2-Chlorotoluene	SW8260B	9/24/2008	0.5	1	0.50	ND	µg/L	R17414
4-Chlorotoluene	SW8260B	9/24/2008	0.5	1	0.50	ND	µg/L	R17414
4-Isopropyltoluene	SW8260B	9/24/2008	0.5	1	0.50	ND	µg/L	R17414
Acetone	SW8260B	9/24/2008	10	1	10.0	ND	µg/L	R17414
Benzene	SW8260B	9/24/2008	0.5	1	0.50	ND	µg/L	R17414
Bromobenzene	SW8260B	9/24/2008	0.5	1	0.50	ND	µg/L	R17414
Bromochloromethane	SW8260B	9/24/2008	0.5	1	0.50	ND	µg/L	R17414
Bromodichloromethane	SW8260B	9/24/2008	0.5	1	0.50	ND	µg/L	R17414
Bromoform	SW8260B	9/24/2008	1	1	1.00	ND	µg/L	R17414
Bromomethane	SW8260B	9/24/2008	6	1	6.00	ND	µg/L	R17414
Carbon tetrachloride	SW8260B	9/24/2008	1	1	1.00	ND	µg/L	R17414
Chlorobenzene	SW8260B	9/24/2008	0.5	1	0.50	ND	µg/L	R17414
Chloroform	SW8260B	9/24/2008	0.5	1	0.50	ND	µg/L	R17414
Chloromethane	SW8260B	9/24/2008	0.5	1	0.50	ND	µg/L	R17414
cis-1,2-Dichloroethene	SW8260B	9/24/2008	0.5	1	0.50	ND	µg/L	R17414
cis-1,3-Dichloropropene	SW8260B	9/24/2008	0.5	1	0.50	ND	µg/L	R17414
Dibromochloromethane	SW8260B	9/24/2008	0.5	1	0.50	ND	µg/L	R17414
Dibromomethane	SW8260B	9/24/2008	0.5	1	0.50	ND	µg/L	R17414
Dichlorodifluoromethane	SW8260B	9/24/2008	0.5	1	0.50	ND	µg/L	R17414
Diisopropyl ether (DIPE)	SW8260B	9/24/2008	0.5	1	0.50	ND	µg/L	R17414
Ethyl tert-butyl ether (ETBE)	SW8260B	9/24/2008	0.5	1	0.50	ND	µg/L	R17414

These analyses were performed according to State of California Environmental Laboratory Accreditation program, Certificate # 1991

Report prepared for: Charlie Almestad
KLEINFELDER

Date Received: 9/16/2008
Date Reported: 9/28/2008

Client Sample ID: MW-6
Sample Location: CTO
Sample Matrix: WATER
Date/Time Sampled 9/16/2008 12:35:00 PM

Lab Sample ID: 0809104-006
Date Prepared: 9/18/2008

Parameters	Analysis Method	Date Analyzed	RL	Dilution Factor	MRL	Result	Units	Analytical Batch
Ethylbenzene	SW8260B	9/24/2008	0.5	1	0.50	ND	µg/L	R17414
Freon-113	SW8260B	9/24/2008	1	1	1.00	ND	µg/L	R17414
Hexachlorobutadiene	SW8260B	9/24/2008	0.5	1	0.50	ND	µg/L	R17414
Isopropylbenzene	SW8260B	9/24/2008	1	1	1.00	ND	µg/L	R17414
Methyl tert-butyl ether (MTBE)	SW8260B	9/24/2008	0.5	1	0.50	ND	µg/L	R17414
Methylene chloride	SW8260B	9/24/2008	5	1	5.00	ND	µg/L	R17414
Naphthalene	SW8260B	9/24/2008	6	1	6.00	ND	µg/L	R17414
n-Butylbenzene	SW8260B	9/24/2008	0.5	1	0.50	ND	µg/L	R17414
n-Propylbenzene	SW8260B	9/24/2008	0.5	1	0.50	ND	µg/L	R17414
sec-Butylbenzene	SW8260B	9/24/2008	0.5	1	0.50	ND	µg/L	R17414
Styrene	SW8260B	9/24/2008	0.5	1	0.50	ND	µg/L	R17414
t-Butyl alcohol (t-Butanol)	SW8260B	9/24/2008	5	1	5.00	ND	µg/L	R17414
tert-Amyl methyl ether (TAME)	SW8260B	9/24/2008	0.5	1	0.50	ND	µg/L	R17414
tert-Butylbenzene	SW8260B	9/24/2008	0.5	1	0.50	ND	µg/L	R17414
Tetrachloroethene	SW8260B	9/24/2008	0.5	1	0.50	3.94	µg/L	R17414
Toluene	SW8260B	9/24/2008	0.5	1	0.50	ND	µg/L	R17414
trans-1,2-Dichloroethene	SW8260B	9/24/2008	0.5	1	0.50	ND	µg/L	R17414
trans-1,3-Dichloropropene	SW8260B	9/24/2008	0.5	1	0.50	ND	µg/L	R17414
Trichloroethene	SW8260B	9/24/2008	0.5	1	0.50	ND	µg/L	R17414
Trichlorofluoromethane	SW8260B	9/24/2008	0.5	1	0.50	ND	µg/L	R17414
Vinyl chloride	SW8260B	9/24/2008	0.5	1	0.50	ND	µg/L	R17414
Xylenes, Total	SW8260B	9/24/2008	1.5	1	1.50	ND	µg/L	R17414
Surr: Dibromofluoromethane	SW8260B	9/24/2008	0	1	61.2-131	102	%REC	R17414
Surr: 4-Bromofluorobenzene	SW8260B	9/24/2008	0	1	64.1-120	98.2	%REC	R17414
Surr: Toluene-d8	SW8260B	9/24/2008	0	1	75.1-127	93.5	%REC	R17414

These analyses were performed according to State of California Environmental Laboratory Accreditation program, Certificate # 1991

Report prepared for: Charlie Almestad
KLEINFELDER

Date Received: 9/16/2008
Date Reported: 9/28/2008

Client Sample ID: MW-7
Sample Location: CTO
Sample Matrix: WATER
Date/Time Sampled 9/16/2008 1:05:00 PM

Lab Sample ID: 0809104-007
Date Prepared: 9/18/2008

Parameters	Analysis Method	Date Analyzed	RL	Dilution Factor	MRL	Result	Units	Analytical Batch
Total Dissolved Solids (Residue, Filterable)	E160.1	9/17/2008	10	1	10	580	mg/L	R17369
TPH (Diesel)	SW8015B	9/19/2008	0.1	1	0.125	ND	mg/L	R17389
Surr: Pentacosane	SW8015B	9/19/2008	0	1	57.9-125	104	%REC	R17389
Note: Reporting limits increased due to limited sample available.								
TPH (Gasoline)	SW8015B	9/18/2008	0.05	1	0.0500	ND	mg/L	R17354
Surr: Trifluorotoluene	SW8015B	9/18/2008	0	1	65-135	96.0	%REC	R17354

These analyses were performed according to State of California Environmental Laboratory Accreditation program, Certificate # 1991

Report prepared for: Charlie Almestad
KLEINFELDER

Date Received: 9/16/2008
Date Reported: 9/28/2008

Client Sample ID: MW-7
Sample Location: CTO
Sample Matrix: WATER
Date/Time Sampled 9/16/2008 1:05:00 PM

Lab Sample ID: 0809104-007
Date Prepared: 9/18/2008

Parameters	Analysis Method	Date Analyzed	RL	Dilution Factor	MRL	Result	Units	Analytical Batch
1,1,1,2-Tetrachloroethane	SW8260B	9/24/2008	1	1	1.00	ND	µg/L	R17414
1,1,1-Trichloroethane	SW8260B	9/24/2008	0.5	1	0.50	ND	µg/L	R17414
1,1,2,2-Tetrachloroethane	SW8260B	9/24/2008	1	1	1.00	ND	µg/L	R17414
1,1,2-Trichloroethane	SW8260B	9/24/2008	0.5	1	0.50	ND	µg/L	R17414
1,1-Dichloroethane	SW8260B	9/24/2008	0.5	1	0.50	ND	µg/L	R17414
1,1-Dichloroethene	SW8260B	9/24/2008	1	1	1.00	ND	µg/L	R17414
1,1-Dichloropropene	SW8260B	9/24/2008	0.5	1	0.50	ND	µg/L	R17414
1,2,3-Trichlorobenzene	SW8260B	9/24/2008	6	1	6.00	ND	µg/L	R17414
1,2,3-Trichloropropane	SW8260B	9/24/2008	1	1	1.00	ND	µg/L	R17414
1,2,4-Trichlorobenzene	SW8260B	9/24/2008	6	1	6.00	ND	µg/L	R17414
1,2,4-Trimethylbenzene	SW8260B	9/24/2008	0.5	1	0.50	ND	µg/L	R17414
1,2-Dibromo-3-chloropropane	SW8260B	9/24/2008	0.5	1	0.50	ND	µg/L	R17414
1,2-Dibromoethane (EDB)	SW8260B	9/24/2008	0.5	1	0.50	ND	µg/L	R17414
1,2-Dichlorobenzene	SW8260B	9/24/2008	0.5	1	0.50	ND	µg/L	R17414
1,2-Dichloroethane (EDC)	SW8260B	9/24/2008	0.5	1	0.50	ND	µg/L	R17414
1,2-Dichloropropane	SW8260B	9/24/2008	6	1	6.00	ND	µg/L	R17414
1,3,5-Trimethylbenzene	SW8260B	9/24/2008	0.5	1	0.50	ND	µg/L	R17414
1,3-Dichlorobenzene	SW8260B	9/24/2008	0.5	1	0.50	ND	µg/L	R17414
1,3-Dichloropropene	SW8260B	9/24/2008	0.5	1	0.50	ND	µg/L	R17414
1,4-Dichlorobenzene	SW8260B	9/24/2008	0.5	1	0.50	ND	µg/L	R17414
2,2-Dichloropropane	SW8260B	9/24/2008	0.5	1	0.50	ND	µg/L	R17414
2-Chloroethyl vinyl ether	SW8260B	9/24/2008	1	1	1.00	ND	µg/L	R17414
2-Chlorotoluene	SW8260B	9/24/2008	0.5	1	0.50	ND	µg/L	R17414
4-Chlorotoluene	SW8260B	9/24/2008	0.5	1	0.50	ND	µg/L	R17414
4-Isopropyltoluene	SW8260B	9/24/2008	0.5	1	0.50	ND	µg/L	R17414
Acetone	SW8260B	9/24/2008	10	1	10.0	ND	µg/L	R17414
Benzene	SW8260B	9/24/2008	0.5	1	0.50	ND	µg/L	R17414
Bromobenzene	SW8260B	9/24/2008	0.5	1	0.50	ND	µg/L	R17414
Bromochloromethane	SW8260B	9/24/2008	0.5	1	0.50	ND	µg/L	R17414
Bromodichloromethane	SW8260B	9/24/2008	0.5	1	0.50	ND	µg/L	R17414
Bromoform	SW8260B	9/24/2008	1	1	1.00	ND	µg/L	R17414
Bromomethane	SW8260B	9/24/2008	6	1	6.00	ND	µg/L	R17414
Carbon tetrachloride	SW8260B	9/24/2008	1	1	1.00	ND	µg/L	R17414
Chlorobenzene	SW8260B	9/24/2008	0.5	1	0.50	ND	µg/L	R17414
Chloroform	SW8260B	9/24/2008	0.5	1	0.50	ND	µg/L	R17414
Chloromethane	SW8260B	9/24/2008	0.5	1	0.50	ND	µg/L	R17414
cis-1,2-Dichloroethene	SW8260B	9/24/2008	0.5	1	0.50	ND	µg/L	R17414
cis-1,3-Dichloropropene	SW8260B	9/24/2008	0.5	1	0.50	ND	µg/L	R17414
Dibromochloromethane	SW8260B	9/24/2008	0.5	1	0.50	ND	µg/L	R17414
Dibromomethane	SW8260B	9/24/2008	0.5	1	0.50	ND	µg/L	R17414
Dichlorodifluoromethane	SW8260B	9/24/2008	0.5	1	0.50	ND	µg/L	R17414
Diisopropyl ether (DIPE)	SW8260B	9/24/2008	0.5	1	0.50	ND	µg/L	R17414
Ethyl tert-butyl ether (ETBE)	SW8260B	9/24/2008	0.5	1	0.50	ND	µg/L	R17414

These analyses were performed according to State of California Environmental Laboratory Accreditation program, Certificate # 1991

Report prepared for: Charlie Almestad
KLEINFELDER

Date Received: 9/16/2008
Date Reported: 9/28/2008

Client Sample ID: MW-7
Sample Location: CTO
Sample Matrix: WATER
Date/Time Sampled 9/16/2008 1:05:00 PM

Lab Sample ID: 0809104-007
Date Prepared: 9/18/2008

Parameters	Analysis Method	Date Analyzed	RL	Dilution Factor	MRL	Result	Units	Analytical Batch
Ethylbenzene	SW8260B	9/24/2008	0.5	1	0.50	ND	µg/L	R17414
Freon-113	SW8260B	9/24/2008	1	1	1.00	ND	µg/L	R17414
Hexachlorobutadiene	SW8260B	9/24/2008	0.5	1	0.50	ND	µg/L	R17414
Isopropylbenzene	SW8260B	9/24/2008	1	1	1.00	ND	µg/L	R17414
Methyl tert-butyl ether (MTBE)	SW8260B	9/24/2008	0.5	1	0.50	ND	µg/L	R17414
Methylene chloride	SW8260B	9/24/2008	5	1	5.00	ND	µg/L	R17414
Naphthalene	SW8260B	9/24/2008	6	1	6.00	ND	µg/L	R17414
n-Butylbenzene	SW8260B	9/24/2008	0.5	1	0.50	ND	µg/L	R17414
n-Propylbenzene	SW8260B	9/24/2008	0.5	1	0.50	ND	µg/L	R17414
sec-Butylbenzene	SW8260B	9/24/2008	0.5	1	0.50	ND	µg/L	R17414
Styrene	SW8260B	9/24/2008	0.5	1	0.50	ND	µg/L	R17414
t-Butyl alcohol (t-Butanol)	SW8260B	9/24/2008	5	1	5.00	ND	µg/L	R17414
tert-Amyl methyl ether (TAME)	SW8260B	9/24/2008	0.5	1	0.50	ND	µg/L	R17414
tert-Butylbenzene	SW8260B	9/24/2008	0.5	1	0.50	ND	µg/L	R17414
Tetrachloroethene	SW8260B	9/24/2008	0.5	1	0.50	ND	µg/L	R17414
Toluene	SW8260B	9/24/2008	0.5	1	0.50	ND	µg/L	R17414
trans-1,2-Dichloroethene	SW8260B	9/24/2008	0.5	1	0.50	ND	µg/L	R17414
trans-1,3-Dichloropropene	SW8260B	9/24/2008	0.5	1	0.50	ND	µg/L	R17414
Trichloroethene	SW8260B	9/24/2008	0.5	1	0.50	ND	µg/L	R17414
Trichlorofluoromethane	SW8260B	9/24/2008	0.5	1	0.50	ND	µg/L	R17414
Vinyl chloride	SW8260B	9/24/2008	0.5	1	0.50	ND	µg/L	R17414
Xylenes, Total	SW8260B	9/24/2008	1.5	1	1.50	ND	µg/L	R17414
Surr: Dibromofluoromethane	SW8260B	9/24/2008	0	1	61.2-131	83.0	%REC	R17414
Surr: 4-Bromofluorobenzene	SW8260B	9/24/2008	0	1	64.1-120	99.2	%REC	R17414
Surr: Toluene-d8	SW8260B	9/24/2008	0	1	75.1-127	95.9	%REC	R17414

These analyses were performed according to State of California Environmental Laboratory Accreditation program, Certificate # 1991

Report prepared for: Charlie Almestad
KLEINFELDER

Date Received: 9/16/2008
Date Reported: 9/28/2008

Client Sample ID: MW-2D
Sample Location: CTO
Sample Matrix: WATER
Date/Time Sampled 9/16/2008 2:50:00 PM

Lab Sample ID: 0809104-008
Date Prepared: 9/18/2008

Parameters	Analysis Method	Date Analyzed	RL	Dilution Factor	MRL	Result	Units	Analytical Batch
TPH (Diesel)	SW8015B	9/19/2008	0.1	4	0.400	3.03x	mg/L	R17389
Surr: Pentacosane	SW8015B	9/19/2008	0	4	57.9-125	100	%REC	R17389

Note: x- Sample chromatogram does not resemble typical diesel pattern (possibly fuel lighter than diesel). Lighter end hydrocarbons and hydrocarbon peaks within the diesel range quantitated as diesel.

These analyses were performed according to State of California Environmental Laboratory Accreditation program, Certificate # 1991

Report prepared for: Charlie Almestad
KLEINFELDER

Date Received: 9/16/2008
Date Reported: 9/28/2008

Client Sample ID: MW-2D
Sample Location: CTO
Sample Matrix: WATER
Date/Time Sampled 9/16/2008 2:50:00 PM

Lab Sample ID: 0809104-008
Date Prepared: 9/18/2008

Parameters	Analysis Method	Date Analyzed	RL	Dilution Factor	MRL	Result	Units	Analytical Batch
1,1,1,2-Tetrachloroethane	SW8260B	9/25/2008	1	44	44.0	ND	µg/L	R17429
1,1,1-Trichloroethane	SW8260B	9/25/2008	0.5	44	22.0	ND	µg/L	R17429
1,1,2,2-Tetrachloroethane	SW8260B	9/25/2008	1	44	44.0	ND	µg/L	R17429
1,1,2-Trichloroethane	SW8260B	9/25/2008	0.5	44	22.0	ND	µg/L	R17429
1,1-Dichloroethane	SW8260B	9/25/2008	0.5	44	22.0	ND	µg/L	R17429
1,1-Dichloroethene	SW8260B	9/25/2008	1	44	44.0	ND	µg/L	R17429
1,1-Dichloropropene	SW8260B	9/25/2008	0.5	44	22.0	ND	µg/L	R17429
1,2,3-Trichlorobenzene	SW8260B	9/25/2008	6	44	264	ND	µg/L	R17429
1,2,3-Trichloropropane	SW8260B	9/25/2008	1	44	44.0	ND	µg/L	R17429
1,2,4-Trichlorobenzene	SW8260B	9/25/2008	6	44	264	ND	µg/L	R17429
1,2,4-Trimethylbenzene	SW8260B	9/25/2008	0.5	44	22.0	4250	µg/L	R17429
1,2-Dibromo-3-chloropropane	SW8260B	9/25/2008	0.5	44	22.0	ND	µg/L	R17429
1,2-Dibromoethane (EDB)	SW8260B	9/25/2008	0.5	44	22.0	ND	µg/L	R17429
1,2-Dichlorobenzene	SW8260B	9/25/2008	0.5	44	22.0	ND	µg/L	R17429
1,2-Dichloroethane (EDC)	SW8260B	9/25/2008	0.5	44	22.0	40.9	µg/L	R17429
1,2-Dichloropropane	SW8260B	9/25/2008	6	44	264	ND	µg/L	R17429
1,3,5-Trimethylbenzene	SW8260B	9/25/2008	0.5	44	22.0	859	µg/L	R17429
1,3-Dichlorobenzene	SW8260B	9/25/2008	0.5	44	22.0	ND	µg/L	R17429
1,3-Dichloropropene	SW8260B	9/25/2008	0.5	44	22.0	ND	µg/L	R17429
1,4-Dichlorobenzene	SW8260B	9/25/2008	0.5	44	22.0	ND	µg/L	R17429
2,2-Dichloropropane	SW8260B	9/25/2008	0.5	44	22.0	ND	µg/L	R17429
2-Chloroethyl vinyl ether	SW8260B	9/25/2008	1	44	44.0	ND	µg/L	R17429
2-Chlorotoluene	SW8260B	9/25/2008	0.5	44	22.0	ND	µg/L	R17429
4-Chlorotoluene	SW8260B	9/25/2008	0.5	44	22.0	ND	µg/L	R17429
4-Isopropyltoluene	SW8260B	9/25/2008	0.5	44	22.0	ND	µg/L	R17429
Acetone	SW8260B	9/25/2008	10	44	440	ND	µg/L	R17429
Benzene	SW8260B	9/25/2008	0.5	44	22.0	437	µg/L	R17429
Bromobenzene	SW8260B	9/25/2008	0.5	44	22.0	ND	µg/L	R17429
Bromochloromethane	SW8260B	9/25/2008	0.5	44	22.0	ND	µg/L	R17429
Bromodichloromethane	SW8260B	9/25/2008	0.5	44	22.0	ND	µg/L	R17429
Bromoform	SW8260B	9/25/2008	1	44	44.0	ND	µg/L	R17429
Bromomethane	SW8260B	9/25/2008	6	44	264	ND	µg/L	R17429
Carbon tetrachloride	SW8260B	9/25/2008	1	44	44.0	ND	µg/L	R17429
Chlorobenzene	SW8260B	9/25/2008	0.5	44	22.0	ND	µg/L	R17429
Chloroform	SW8260B	9/25/2008	0.5	44	22.0	ND	µg/L	R17429
Chloromethane	SW8260B	9/25/2008	0.5	44	22.0	ND	µg/L	R17429
cis-1,2-Dichloroethene	SW8260B	9/25/2008	0.5	44	22.0	ND	µg/L	R17429
cis-1,3-Dichloropropene	SW8260B	9/25/2008	0.5	44	22.0	ND	µg/L	R17429
Dibromochloromethane	SW8260B	9/25/2008	0.5	44	22.0	ND	µg/L	R17429
Dibromomethane	SW8260B	9/25/2008	0.5	44	22.0	ND	µg/L	R17429
Dichlorodifluoromethane	SW8260B	9/25/2008	0.5	44	22.0	ND	µg/L	R17429
Diisopropyl ether (DIPE)	SW8260B	9/25/2008	0.5	44	22.0	ND	µg/L	R17429
Ethyl tert-butyl ether (ETBE)	SW8260B	9/25/2008	0.5	44	22.0	ND	µg/L	R17429

These analyses were performed according to State of California Environmental Laboratory Accreditation program, Certificate # 1991

Report prepared for: Charlie Almestad
KLEINFELDER

Date Received: 9/16/2008
Date Reported: 9/28/2008

Client Sample ID: MW-2D
Sample Location: CTO
Sample Matrix: WATER
Date/Time Sampled 9/16/2008 2:50:00 PM

Lab Sample ID: 0809104-008
Date Prepared: 9/18/2008

Parameters	Analysis Method	Date Analyzed	RL	Dilution Factor	MRL	Result	Units	Analytical Batch
Ethylbenzene	SW8260B	9/25/2008	0.5	44	22.0	1770	µg/L	R17429
Freon-113	SW8260B	9/25/2008	1	44	44.0	ND	µg/L	R17429
Hexachlorobutadiene	SW8260B	9/25/2008	0.5	44	22.0	ND	µg/L	R17429
Isopropylbenzene	SW8260B	9/25/2008	1	44	44.0	112	µg/L	R17429
Methyl tert-butyl ether (MTBE)	SW8260B	9/25/2008	0.5	44	22.0	ND	µg/L	R17429
Methylene chloride	SW8260B	9/25/2008	5	44	220	ND	µg/L	R17429
Naphthalene	SW8260B	9/25/2008	6	44	264	3500	µg/L	R17429
n-Butylbenzene	SW8260B	9/25/2008	0.5	44	22.0	ND	µg/L	R17429
n-Propylbenzene	SW8260B	9/25/2008	0.5	44	22.0	547	µg/L	R17429
sec-Butylbenzene	SW8260B	9/25/2008	0.5	44	22.0	ND	µg/L	R17429
Styrene	SW8260B	9/25/2008	0.5	44	22.0	ND	µg/L	R17429
t-Butyl alcohol (t-Butanol)	SW8260B	9/25/2008	5	44	220	ND	µg/L	R17429
tert-Amyl methyl ether (TAME)	SW8260B	9/25/2008	0.5	44	22.0	ND	µg/L	R17429
tert-Butylbenzene	SW8260B	9/25/2008	0.5	44	22.0	ND	µg/L	R17429
Tetrachloroethene	SW8260B	9/25/2008	0.5	44	22.0	ND	µg/L	R17429
Toluene	SW8260B	9/25/2008	0.5	44	22.0	1680	µg/L	R17429
trans-1,2-Dichloroethene	SW8260B	9/25/2008	0.5	44	22.0	ND	µg/L	R17429
trans-1,3-Dichloropropene	SW8260B	9/25/2008	0.5	44	22.0	ND	µg/L	R17429
Trichloroethene	SW8260B	9/25/2008	0.5	44	22.0	ND	µg/L	R17429
Trichlorofluoromethane	SW8260B	9/25/2008	0.5	44	22.0	ND	µg/L	R17429
Vinyl chloride	SW8260B	9/25/2008	0.5	44	22.0	ND	µg/L	R17429
Xylenes, Total	SW8260B	9/25/2008	1.5	44	66.0	10400	µg/L	R17429
Surr: Dibromofluoromethane	SW8260B	9/25/2008	0	44	61.2-131	103	%REC	R17429
Surr: 4-Bromofluorobenzene	SW8260B	9/25/2008	0	44	64.1-120	92.5	%REC	R17429
Surr: Toluene-d8	SW8260B	9/25/2008	0	44	75.1-127	107	%REC	R17429
TPH (Gasoline)	SW8260B(TPH)	9/27/2008	50	44	2200	57000x	µg/L	G17433
Surr: 4-Bromofllurobenzene	SW8260B(TPH)	9/27/2008	0	44	58.4-133	61.6	%REC	G17433

Note: x- Sample chromatogram does not resemble gasoline standard pattern (possibly aged gasoline). Although TPH as Gasoline constituents are present, TPH value includes heavy end non-target gasoline compounds within range of C5-C12 quantified as Gasoline

These analyses were performed according to State of California Environmental Laboratory Accreditation program, Certificate # 1991

Definitions, legends and Notes

Note	Description
ug/kg	Microgram per kilogram (ppb, part per billion).
ug/L	Microgram per liter (ppb, part per billion).
mg/kg	Milligram per kilogram (ppm, part per million).
mg/L	Milligram per liter (ppm, part per million).
LCS/LCSD	Laboratory control sample/laboratory control sample duplicate.
MDL	Method detection limit.
MRL	Modified reporting limit. When sample is subject to dilution, reporting limit times dilution factor yields MRL.
MS/MSD	Matrix spike/matrix spike duplicate.
N/A	Not applicable.
ND	Not detected at or above detection limit.
NR	Not reported.
QC	Quality Control.
RL	Reporting limit.
% RPD	Percent relative difference.
a	pH was measured immediately upon the receipt of the sample, but it was still done outside the holding time.
sub	Analyzed by subcontracting laboratory, Lab Certificate #

These analyses were performed according to State of California Environmental Laboratory Accreditation program, Certificate # 1991

CLIENT: KLEINFELDER
Work Order: 0809104
Project: 95539

ANALYTICAL QC SUMMARY REPORT

BatchID: G17433

Sample ID **MB_G17433** SampType: **MBLK** TestCode: **TPH_GAS_W** Units: **µg/L** Prep Date: **9/27/2008** RunNo: **17433**
Client ID: **ZZZZZ** Batch ID: **G17433** TestNo: **SW8260B(TP** Analysis Date: **9/27/2008** SeqNo: **249608**

Analyte	Result	PQL	SPK value	SPK Ref Val	%REC	LowLimit	HighLimit	RPD Ref Val	%RPD	RPDLimit	Qual
TPH (Gasoline)	ND	50									
Surr: 4-Bromofllurobenzene	9.910	0	11.36	0	87.2	58.4	133				

Sample ID **LCS_G17433** SampType: **LCS** TestCode: **TPH_GAS_W** Units: **µg/L** Prep Date: **9/27/2008** RunNo: **17433**
Client ID: **ZZZZZ** Batch ID: **G17433** TestNo: **SW8260B(TP** Analysis Date: **9/27/2008** SeqNo: **249609**

Analyte	Result	PQL	SPK value	SPK Ref Val	%REC	LowLimit	HighLimit	RPD Ref Val	%RPD	RPDLimit	Qual
TPH (Gasoline)	232.0	50	227	0	102	52.4	127				
Surr: 4-Bromofllurobenzene	11.80	0	11.36	0	104	58.4	133				

Sample ID **LCSD_G17433** SampType: **LCSD** TestCode: **TPH_GAS_W** Units: **µg/L** Prep Date: **9/27/2008** RunNo: **17433**
Client ID: **ZZZZZ** Batch ID: **G17433** TestNo: **SW8260B(TP** Analysis Date: **9/27/2008** SeqNo: **249610**

Analyte	Result	PQL	SPK value	SPK Ref Val	%REC	LowLimit	HighLimit	RPD Ref Val	%RPD	RPDLimit	Qual
TPH (Gasoline)	212.0	50	227	0	93.4	52.4	127	232	9.01	20	
Surr: 4-Bromofllurobenzene	11.13	0	11.36	0	98.0	58.4	133	0	0	0	

Qualifiers:

E	Value above quantitation range	H	Holding times for preparation or analysis exceeded	J	Analyte detected below quantitation limits
ND	Not Detected at the Reporting Limit	R	RPD outside accepted recovery limits	S	Spike Recovery outside accepted recovery limits

CLIENT: KLEINFELDER
Work Order: 0809104
Project: 95539

ANALYTICAL QC SUMMARY REPORT

BatchID: R17344

Sample ID	**MBLK**	SampType:	**MBLK**	TestCode:	**FERROUS IR**	Units:	**mg/L**	Prep Date:			RunNo:	**17344**	
Client ID:	**ZZZZZ**	Batch ID:	**R17344**	TestNo:	**SM3500-FE B**			Analysis Date:	**9/17/2008**		SeqNo:	**248425**	

Analyte	Result	PQL	SPK value	SPK Ref Val	%REC	LowLimit	HighLimit	RPD Ref Val	%RPD	RPDLimit	Qual
Iron, Ferrous	ND	0.10									

Qualifiers:

E	Value above quantitation range	H	Holding times for preparation or analysis exceeded	J	Analyte detected below quantitation limits
ND	Not Detected at the Reporting Limit	R	RPD outside accepted recovery limits	S	Spike Recovery outside accepted recovery limits

CLIENT: KLEINFELDER
Work Order: 0809104
Project: 95539

ANALYTICAL QC SUMMARY REPORT

BatchID: R17354

Sample ID	MB_R17354	SampType:	MBLK	TestCode:	TPHGAS_W	Units:	mg/L	Prep Date:	9/17/2008	RunNo:	17354
Client ID:	ZZZZZ	Batch ID:	R17354	TestNo:	SW8015B			Analysis Date:	9/17/2008	SeqNo:	248497

Analyte	Result	PQL	SPK value	SPK Ref Val	%REC	LowLimit	HighLimit	RPD Ref Val	%RPD	RPDLimit	Qual
TPH (Gasoline)	ND	0.0500									
Surr: Trifluorotoluene	0.08350	0	0.1136	0	73.5	65	135				

Sample ID	LCS_R17354	SampType:	LCS	TestCode:	TPHGAS_W	Units:	mg/L	Prep Date:	9/17/2008	RunNo:	17354
Client ID:	ZZZZZ	Batch ID:	R17354	TestNo:	SW8015B			Analysis Date:	9/17/2008	SeqNo:	248527

Analyte	Result	PQL	SPK value	SPK Ref Val	%REC	LowLimit	HighLimit	RPD Ref Val	%RPD	RPDLimit	Qual
TPH (Gasoline)	0.1944	0.0500	0.2272	0	85.6	65	135				
Surr: Trifluorotoluene	0.1276	0	0.1136	0	112	65	135				

Sample ID	LCSD_R17354	SampType:	LCSD	TestCode:	TPHGAS_W	Units:	mg/L	Prep Date:	9/17/2008	RunNo:	17354
Client ID:	ZZZZZ	Batch ID:	R17354	TestNo:	SW8015B			Analysis Date:	9/17/2008	SeqNo:	248528

Analyte	Result	PQL	SPK value	SPK Ref Val	%REC	LowLimit	HighLimit	RPD Ref Val	%RPD	RPDLimit	Qual
TPH (Gasoline)	0.1658	0.0500	0.2272	0	73.0	65	135	0.1944	15.9	20	
Surr: Trifluorotoluene	0.1324	0	0.1136	0	117	65	135	0	0	20	

Qualifiers:

E	Value above quantitation range	H	Holding times for preparation or analysis exceeded	J	Analyte detected below quantitation limits
ND	Not Detected at the Reporting Limit	R	RPD outside accepted recovery limits	S	Spike Recovery outside accepted recovery limits

CLIENT: KLEINFELDER
Work Order: 0809104
Project: 95539

ANALYTICAL QC SUMMARY REPORT

BatchID: R17366

Sample ID	SampType	TestCode	Units	Prep Date	RunNo
MBLK	**MBLK**	**ANIONS_W**	**mg/L**	**9/17/2008**	**17366**
Client ID: **ZZZZZ**	Batch ID: **R17366**	TestNo: **E300.0**		Analysis Date: **9/17/2008**	SeqNo: **248684**

Analyte	Result	PQL	SPK value	SPK Ref Val	%REC	LowLimit	HighLimit	RPD Ref Val	%RPD	RPDLimit	Qual
Nitrate (As N)	ND	0.50									
Nitrite (As N)	ND	0.50									
Sulfate	ND	1.0									

Sample ID	SampType	TestCode	Units	Prep Date	RunNo
LCS	**LCS**	**ANIONS_W**	**mg/L**	**9/17/2008**	**17366**
Client ID: **ZZZZZ**	Batch ID: **R17366**	TestNo: **E300.0**		Analysis Date: **9/17/2008**	SeqNo: **248682**

Analyte	Result	PQL	SPK value	SPK Ref Val	%REC	LowLimit	HighLimit	RPD Ref Val	%RPD	RPDLimit	Qual
Nitrate (As N)	4.651	0.50	5	0	93.0	80	120				
Nitrite (As N)	4.916	0.50	5	0	98.3	80	120				
Sulfate	4.850	1.0	5	0	97.0	80	120				

Sample ID	SampType	TestCode	Units	Prep Date	RunNo
LCSD	**LCSD**	**ANIONS_W**	**mg/L**	**9/17/2008**	**17366**
Client ID: **ZZZZZ**	Batch ID: **R17366**	TestNo: **E300.0**		Analysis Date: **9/17/2008**	SeqNo: **248683**

Analyte	Result	PQL	SPK value	SPK Ref Val	%REC	LowLimit	HighLimit	RPD Ref Val	%RPD	RPDLimit	Qual
Nitrate (As N)	4.609	0.50	5	0	92.2	80	120	4.651	0.907	20	
Nitrite (As N)	4.867	0.50	5	0	97.3	80	120	4.916	1.00	20	
Sulfate	4.770	1.0	5	0	95.4	80	120	4.85	1.66	20	

Sample ID	SampType	TestCode	Units	Prep Date	RunNo
0809104-002AMS	**MS**	**ANIONS_W**	**mg/L**	**9/17/2008**	**17366**
Client ID: **MW-2**	Batch ID: **R17366**	TestNo: **E300.0**		Analysis Date: **9/17/2008**	SeqNo: **248678**

Analyte	Result	PQL	SPK value	SPK Ref Val	%REC	LowLimit	HighLimit	RPD Ref Val	%RPD	RPDLimit	Qual
Nitrate (As N)	10.76	0.50	5	5.178	112	75	125				
Nitrite (As N)	4.581	0.50	5	0.271	86.2	75	125				

Qualifiers:

E	Value above quantitation range	H	Holding times for preparation or analysis exceeded	J	Analyte detected below quantitation limits
ND	Not Detected at the Reporting Limit	R	RPD outside accepted recovery limits	S	Spike Recovery outside accepted recovery limits

CLIENT: KLEINFELDER
Work Order: 0809104
Project: 95539

ANALYTICAL QC SUMMARY REPORT

BatchID: R17366

Sample ID	0809104-002AMSD	SampType:	MSD	TestCode:	ANIONS_W	Units:	mg/L	Prep Date:	9/17/2008	RunNo:	17366
Client ID:	MW-2	Batch ID:	R17366	TestNo:	E300.0			Analysis Date:	9/17/2008	SeqNo:	248679

Analyte	Result	PQL	SPK value	SPK Ref Val	%REC	LowLimit	HighLimit	RPD Ref Val	%RPD	RPDLimit	Qual
Nitrate (As N)	10.66	0.50	5	5.178	110	75	125	10.76	0.953	20	
Nitrite (As N)	4.562	0.50	5	0.271	85.8	75	125	4.581	0.416	20	

Qualifiers:

E	Value above quantitation range	H	Holding times for preparation or analysis exceeded	J	Analyte detected below quantitation limits
ND	Not Detected at the Reporting Limit	R	RPD outside accepted recovery limits	S	Spike Recovery outside accepted recovery limits

CLIENT: KLEINFELDER
Work Order: 0809104
Project: 95539

ANALYTICAL QC SUMMARY REPORT

BatchID: R17369

Sample ID	**MB-R17369**	SampType:	**MBLK**	TestCode:	**TDS_W**	Units:	**mg/L**	Prep Date:			RunNo:	**17369**	
Client ID:	**ZZZZZ**	Batch ID:	**R17369**	TestNo:	**E160.1**			Analysis Date:	**9/17/2008**		SeqNo:	**248700**	

Analyte	Result	PQL	SPK value	SPK Ref Val	%REC	LowLimit	HighLimit	RPD Ref Val	%RPD	RPDLimit	Qual
Total Dissolved Solids (Residue, Filtera	ND	10									

Qualifiers:

E	Value above quantitation range	H	Holding times for preparation or analysis exceeded	J	Analyte detected below quantitation limits
ND	Not Detected at the Reporting Limit	R	RPD outside accepted recovery limits	S	Spike Recovery outside accepted recovery limits

CLIENT: KLEINFELDER
Work Order: 0809104
Project: 95539

ANALYTICAL QC SUMMARY REPORT

BatchID: R17385

Sample ID	**MBLK**	SampType:	**MBLK**	TestCode:	**Sulfite_W**	Units:	**mg/L**	Prep Date:			RunNo:	**17385**	
Client ID:	**ZZZZZ**	Batch ID:	**R17385**	TestNo:	**E377.1**			Analysis Date:	**9/18/2008**		SeqNo:	**248917**	

Analyte	Result	PQL	SPK value	SPK Ref Val	%REC	LowLimit	HighLimit	RPD Ref Val	%RPD	RPDLimit	Qual
Sulfite	ND	2.0									

Qualifiers:

E	Value above quantitation range	H	Holding times for preparation or analysis exceeded	J	Analyte detected below quantitation limits
ND	Not Detected at the Reporting Limit	R	RPD outside accepted recovery limits	S	Spike Recovery outside accepted recovery limits

CLIENT: KLEINFELDER
Work Order: 0809104
Project: 95539

ANALYTICAL QC SUMMARY REPORT

BatchID: R17389

Sample ID	WD080918A-MB	SampType:	MBLK	TestCode:	TPHD_W	Units:	mg/L	Prep Date:	9/18/2008	RunNo:	17389
Client ID:	ZZZZZ	Batch ID:	R17389	TestNo:	SW8015B			Analysis Date:	9/19/2008	SeqNo:	248968

Analyte	Result	PQL	SPK value	SPK Ref Val	%REC	LowLimit	HighLimit	RPD Ref Val	%RPD	RPDLimit	Qual
TPH (Diesel)	ND	0.100									
Surr: Pentacosane	0.1000	0	0.1	0	100	57.9	125				

Sample ID	WD080918A-LCS	SampType:	LCS	TestCode:	TPHD_W	Units:	mg/L	Prep Date:	9/18/2008	RunNo:	17389
Client ID:	ZZZZZ	Batch ID:	R17389	TestNo:	SW8015B			Analysis Date:	9/18/2008	SeqNo:	248969

Analyte	Result	PQL	SPK value	SPK Ref Val	%REC	LowLimit	HighLimit	RPD Ref Val	%RPD	RPDLimit	Qual
TPH (Diesel)	1.041	0.100	1	0	104	50.3	125				
Surr: Pentacosane	0.1030	0	0.1	0	103	57.9	125				

Sample ID	WD080918A-LCSD	SampType:	LCSD	TestCode:	TPHD_W	Units:	mg/L	Prep Date:	9/18/2008	RunNo:	17389
Client ID:	ZZZZZ	Batch ID:	R17389	TestNo:	SW8015B			Analysis Date:	9/18/2008	SeqNo:	248970

Analyte	Result	PQL	SPK value	SPK Ref Val	%REC	LowLimit	HighLimit	RPD Ref Val	%RPD	RPDLimit	Qual
TPH (Diesel)	0.9710	0.100	1	0	97.1	50.3	125	1.041	6.96	30	
Surr: Pentacosane	0.09900	0	0.1	0	99.0	57.9	125	0	0	0	

Qualifiers:

E	Value above quantitation range	H	Holding times for preparation or analysis exceeded	J	Analyte detected below quantitation limits
ND	Not Detected at the Reporting Limit	R	RPD outside accepted recovery limits	S	Spike Recovery outside accepted recovery limits

CLIENT: KLEINFELDER
Work Order: 0809104
Project: 95539

ANALYTICAL QC SUMMARY REPORT

BatchID: R17414

Sample ID **BLK-R17414**	SampType: **MBLK**	TestCode: **8260B_W**	Units: **µg/L**	Prep Date: **9/23/2008**	RunNo: **17414**
Client ID: **ZZZZZ**	Batch ID: **R17414**	TestNo: **SW8260B**		Analysis Date: **9/23/2008**	SeqNo: **249284**

Analyte	Result	PQL	SPK value	SPK Ref Val	%REC	LowLimit	HighLimit	RPD Ref Val	%RPD	RPDLimit	Qual
1,1,1,2-Tetrachloroethane	ND	0.560									
1,1,1-Trichloroethane	ND	0.260									
1,1,2,2-Tetrachloroethane	ND	0.560									
1,1,2-Trichloroethane	ND	0.220									
1,1-Dichloroethane	ND	0.340									
1,1-Dichloroethene	ND	0.340									
1,1-Dichloropropene	ND	0.300									
1,2,3-Trichlorobenzene	ND	0.210									
1,2,3-Trichloropropane	ND	0.530									
1,2,4-Trichlorobenzene	ND	0.200									
1,2,4-Trimethylbenzene	ND	0.350									
1,2-Dibromo-3-chloropropane	ND	0.400									
1,2-Dibromoethane (EDB)	ND	0.360									
1,2-Dichlorobenzene	ND	0.210									
1,2-Dichloroethane (EDC)	ND	0.360									
1,2-Dichloropropane	ND	0.280									
1,3,5-Trimethylbenzene	ND	0.380									
1,3-Dichlorobenzene	ND	0.230									
1,4-Dichlorobenzene	ND	0.270									
2,2-Dichloropropane	ND	0.360									
2-Chloroethyl vinyl ether	ND	0.910									
2-Chlorotoluene	ND	0.390									
4-Chlorotoluene	ND	0.360									
4-Isopropyltoluene	ND	0.350									
Acetone	ND	5.60									
Benzene	ND	0.340									
Bromobenzene	ND	0.300									
Bromochloromethane	ND	0.340									
Bromodichloromethane	ND	0.240									
Bromoform	ND	0.650									
Bromomethane	ND	1.00									

Qualifiers:

E	Value above quantitation range	H	Holding times for preparation or analysis exceeded	J	Analyte detected below quantitation limits
ND	Not Detected at the Reporting Limit	R	RPD outside accepted recovery limits	S	Spike Recovery outside accepted recovery limits

CLIENT: KLEINFELDER
Work Order: 0809104
Project: 95539

ANALYTICAL QC SUMMARY REPORT

BatchID: R17414

Sample ID	**BLK-R17414**	SampType:	**MBLK**	TestCode:	**8260B_W**	Units:	**µg/L**	Prep Date:	**9/23/2008**	RunNo:	**17414**
Client ID:	**ZZZZZ**	Batch ID:	**R17414**	TestNo:	**SW8260B**			Analysis Date:	**9/23/2008**	SeqNo:	**249284**

Analyte	Result	PQL	SPK value	SPK Ref Val	%REC	LowLimit	HighLimit	RPD Ref Val	%RPD	RPDLimit	Qual
Carbon tetrachloride	ND	0.290									
Chlorobenzene	ND	0.310									
Chloroform	ND	0.290									
Chloromethane	ND	0.440									
cis-1,2-Dichloroethene	ND	0.360									
cis-1,3-Dichloropropene	ND	0.310									
Dibromochloromethane	ND	0.360									
Dibromomethane	ND	0.350									
Dichlorodifluoromethane	ND	0.320									
Diisopropyl ether (DIPE)	ND	0.450									
Ethyl tert-butyl ether (ETBE)	ND	0.420									
Ethylbenzene	ND	0.250									
Freon-113	ND	0.850									
Hexachlorobutadiene	ND	0.220									
Isopropylbenzene	ND	0.740									
Methyl tert-butyl ether (MTBE)	ND	0.390									
Methylene chloride	ND	0.850									
Naphthalene	ND	0.200									
n-Butylbenzene	0.31 J	0.220									
n-Propylbenzene	ND	0.250									
sec-Butylbenzene	ND	0.320									
Styrene	ND	0.280									
t-Butyl alcohol (t-Butanol)	ND	1.50									
tert-Amyl methyl ether (TAME)	ND	0.320									
tert-Butylbenzene	ND	0.360									
Tetrachloroethene	ND	0.240									
Toluene	ND	0.300									
trans-1,2-Dichloroethene	ND	0.500									
trans-1,3-Dichloropropene	ND	0.450									
Trichloroethene	ND	0.310									
Trichlorofluoromethane	ND	0.260									

Qualifiers:

E	Value above quantitation range	H	Holding times for preparation or analysis exceeded	J	Analyte detected below quantitation limits
ND	Not Detected at the Reporting Limit	R	RPD outside accepted recovery limits	S	Spike Recovery outside accepted recovery limits

CLIENT: KLEINFELDER
Work Order: 0809104
Project: 95539

ANALYTICAL QC SUMMARY REPORT

BatchID: R17414

Sample ID	SampType	TestCode	Units	Prep Date	RunNo
BLK-R17414	**MBLK**	**8260B_W**	**µg/L**	**9/23/2008**	**17414**
Client ID: **ZZZZZ**	Batch ID: **R17414**	TestNo: **SW8260B**		Analysis Date: **9/23/2008**	SeqNo: **249284**

Analyte	Result	PQL	SPK value	SPK Ref Val	%REC	LowLimit	HighLimit	RPD Ref Val	%RPD	RPDLimit	Qual
Vinyl chloride	ND	0.360									
Xylenes, Total	ND	0.770									
Surr: Dibromofluoromethane	12.54	0.395	11.36	0	110	61.2	131				
Surr: 4-Bromofluorobenzene	11.16	0.498	11.36	0	98.2	64.1	120				
Surr: Toluene-d8	11.77	0.531	11.36	0	104	75.1	127				

Sample ID	SampType	TestCode	Units	Prep Date	RunNo
LCS-R17414	**LCS**	**8260B_W**	**µg/L**	**9/23/2008**	**17414**
Client ID: **ZZZZZ**	Batch ID: **R17414**	TestNo: **SW8260B**		Analysis Date: **9/23/2008**	SeqNo: **249282**

Analyte	Result	PQL	SPK value	SPK Ref Val	%REC	LowLimit	HighLimit	RPD Ref Val	%RPD	RPDLimit	Qual
1,1-Dichloroethene	17.51	1.00	17.04	0	103	61.4	129				
Benzene	21.58	0.500	17.04	0	127	66.9	140				
Chlorobenzene	18.45	0.500	17.04	0	108	73.9	137				
Toluene	18.88	0.500	17.04	0	111	76.6	123				
Trichloroethene	20.10	0.500	17.04	0	118	69.3	144				
Surr: Dibromofluoromethane	11.51	0	11.36	0	101	61.2	131				
Surr: 4-Bromofluorobenzene	13.02	0	11.36	0	115	64.1	120				
Surr: Toluene-d8	13.45	0	11.36	0	118	75.1	127				

Sample ID	SampType	TestCode	Units	Prep Date	RunNo
LCSD-R17414	**LCSD**	**8260B_W**	**µg/L**	**9/23/2008**	**17414**
Client ID: **ZZZZZ**	Batch ID: **R17414**	TestNo: **SW8260B**		Analysis Date: **9/23/2008**	SeqNo: **249283**

Analyte	Result	PQL	SPK value	SPK Ref Val	%REC	LowLimit	HighLimit	RPD Ref Val	%RPD	RPDLimit	Qual
1,1-Dichloroethene	16.84	1.00	17.04	0	98.8	61.4	129	17.51	3.90	20	
Benzene	19.42	0.500	17.04	0	114	66.9	140	21.58	10.5	20	
Chlorobenzene	19.32	0.500	17.04	0	113	73.9	137	18.45	4.61	20	
Toluene	19.91	0.500	17.04	0	117	76.6	123	18.88	5.31	20	
Trichloroethene	18.75	0.500	17.04	0	110	69.3	144	20.1	6.95	20	
Surr: Dibromofluoromethane	12.46	0	11.36	0	110	61.2	131	0	0	0	
Surr: 4-Bromofluorobenzene	13.58	0	11.36	0	120	64.1	120	0	0	0	
Surr: Toluene-d8	11.74	0	11.36	0	103	75.1	127	0	0	0	

Qualifiers:
E Value above quantitation range
ND Not Detected at the Reporting Limit
H Holding times for preparation or analysis exceeded
R RPD outside accepted recovery limits
J Analyte detected below quantitation limits
S Spike Recovery outside accepted recovery limits

CLIENT: KLEINFELDER
Work Order: 0809104
Project: 95539

ANALYTICAL QC SUMMARY REPORT

BatchID: R17429

Sample ID	MB_R17429	SampType:	MBLK	TestCode:	8260B_W	Units:	µg/L	Prep Date:	9/25/2008	RunNo:	17429
Client ID:	ZZZZZ	Batch ID:	R17429	TestNo:	SW8260B			Analysis Date:	9/25/2008	SeqNo:	249486

Analyte	Result	PQL	SPK value	SPK Ref Val	%REC	LowLimit	HighLimit	RPD Ref Val	%RPD	RPDLimit	Qual
1,1,1,2-Tetrachloroethane	ND	1.00									
1,1,1-Trichloroethane	ND	0.500									
1,1,2,2-Tetrachloroethane	ND	1.00									
1,1,2-Trichloroethane	ND	0.500									
1,1-Dichloroethane	ND	0.500									
1,1-Dichloroethene	ND	1.00									
1,1-Dichloropropene	ND	0.500									
1,2,3-Trichlorobenzene	ND	6.00									
1,2,3-Trichloropropane	ND	1.00									
1,2,4-Trichlorobenzene	ND	6.00									
1,2,4-Trimethylbenzene	ND	0.500									
1,2-Dibromo-3-chloropropane	ND	0.500									
1,2-Dibromoethane (EDB)	ND	0.500									
1,2-Dichlorobenzene	ND	0.500									
1,2-Dichloroethane (EDC)	ND	0.500									
1,2-Dichloropropane	ND	6.00									
1,3,5-Trimethylbenzene	ND	0.500									
1,3-Dichlorobenzene	ND	0.500									
1,4-Dichlorobenzene	ND	0.500									
2,2-Dichloropropane	ND	0.500									
2-Chloroethyl vinyl ether	ND	1.00									
2-Chlorotoluene	ND	0.500									
4-Chlorotoluene	ND	0.500									
4-Isopropyltoluene	ND	0.500									
Acetone	ND	10.0									
Benzene	ND	0.500									
Bromobenzene	ND	0.500									
Bromochloromethane	ND	0.500									
Bromodichloromethane	ND	0.500									
Bromoform	ND	1.00									
Bromomethane	ND	6.00									

Qualifiers:

E	Value above quantitation range	H	Holding times for preparation or analysis exceeded	J	Analyte detected below quantitation limits
ND	Not Detected at the Reporting Limit	R	RPD outside accepted recovery limits	S	Spike Recovery outside accepted recovery limits

CLIENT: KLEINFELDER
Work Order: 0809104
Project: 95539

ANALYTICAL QC SUMMARY REPORT

BatchID: R17429

Sample ID	MB_R17429	SampType:	MBLK	TestCode:	8260B_W	Units:	µg/L	Prep Date:	9/25/2008	RunNo:	17429
Client ID:	ZZZZZ	Batch ID:	R17429	TestNo:	SW8260B			Analysis Date:	9/25/2008	SeqNo:	249486

Analyte	Result	PQL	SPK value	SPK Ref Val	%REC	LowLimit	HighLimit	RPD Ref Val	%RPD	RPDLimit	Qual
Carbon tetrachloride	ND	1.00									
Chlorobenzene	ND	0.500									
Chloroform	ND	0.500									
Chloromethane	ND	0.500									
cis-1,2-Dichloroethene	ND	0.500									
cis-1,3-Dichloropropene	ND	0.500									
Dibromochloromethane	ND	0.500									
Dibromomethane	ND	0.500									
Dichlorodifluoromethane	ND	0.500									
Diisopropyl ether (DIPE)	ND	0.500									
Ethyl tert-butyl ether (ETBE)	ND	0.500									
Ethylbenzene	ND	0.500									
Freon-113	ND	1.00									
Hexachlorobutadiene	ND	0.500									
Isopropylbenzene	ND	1.00									
Methyl tert-butyl ether (MTBE)	ND	0.500									
Methylene chloride	ND	5.00									
Naphthalene	ND	6.00									
n-Butylbenzene	ND	0.500									
n-Propylbenzene	ND	0.500									
sec-Butylbenzene	ND	0.500									
Styrene	ND	0.500									
t-Butyl alcohol (t-Butanol)	ND	5.00									
tert-Amyl methyl ether (TAME)	ND	0.500									
tert-Butylbenzene	ND	0.500									
Tetrachloroethene	ND	0.500									
Toluene	ND	0.500									
trans-1,2-Dichloroethene	ND	0.500									
trans-1,3-Dichloropropene	ND	0.500									
Trichloroethene	ND	0.500									
Trichlorofluoromethane	ND	0.500									

Qualifiers:

E	Value above quantitation range	H	Holding times for preparation or analysis exceeded	J	Analyte detected below quantitation limits
ND	Not Detected at the Reporting Limit	R	RPD outside accepted recovery limits	S	Spike Recovery outside accepted recovery limits

CLIENT: KLEINFELDER
Work Order: 0809104
Project: 95539

ANALYTICAL QC SUMMARY REPORT

BatchID: R17429

Sample ID **MB_R17429** SampType: **MBLK** TestCode: **8260B_W** Units: **µg/L** Prep Date: **9/25/2008** RunNo: **17429**
Client ID: **ZZZZZ** Batch ID: **R17429** TestNo: **SW8260B** Analysis Date: **9/25/2008** SeqNo: **249486**

Analyte	Result	PQL	SPK value	SPK Ref Val	%REC	LowLimit	HighLimit	RPD Ref Val	%RPD	RPDLimit	Qual
Vinyl chloride	ND	0.500									
Xylenes, Total	ND	1.50									
Surr: Dibromofluoromethane	10.94	0	11.36	0	96.3	61.2	131				
Surr: 4-Bromofluorobenzene	10.55	0	11.36	0	92.9	64.1	120				
Surr: Toluene-d8	11.44	0	11.36	0	101	75.1	127				

Sample ID **LCS_R17429** SampType: **LCS** TestCode: **8260B_W** Units: **µg/L** Prep Date: **9/25/2008** RunNo: **17429**
Client ID: **ZZZZZ** Batch ID: **R17429** TestNo: **SW8260B** Analysis Date: **9/25/2008** SeqNo: **249487**

Analyte	Result	PQL	SPK value	SPK Ref Val	%REC	LowLimit	HighLimit	RPD Ref Val	%RPD	RPDLimit	Qual
1,1-Dichloroethene	14.62	1.00	17.04	0	85.8	61.4	129				
Benzene	14.87	0.500	17.04	0	87.3	66.9	140				
Chlorobenzene	15.05	0.500	17.04	0	88.3	73.9	137				
Toluene	16.73	0.500	17.04	0	98.2	76.6	123				
Trichloroethene	15.23	0.500	17.04	0	89.4	69.3	144				
Surr: Dibromofluoromethane	9.130	0	11.36	0	80.4	61.2	131				
Surr: 4-Bromofluorobenzene	12.71	0	11.36	0	112	64.1	120				
Surr: Toluene-d8	11.16	0	11.36	0	98.2	75.1	127				

Sample ID **LCSD_R17429** SampType: **LCSD** TestCode: **8260B_W** Units: **µg/L** Prep Date: **9/25/2008** RunNo: **17429**
Client ID: **ZZZZZ** Batch ID: **R17429** TestNo: **SW8260B** Analysis Date: **9/25/2008** SeqNo: **249488**

Analyte	Result	PQL	SPK value	SPK Ref Val	%REC	LowLimit	HighLimit	RPD Ref Val	%RPD	RPDLimit	Qual
1,1-Dichloroethene	15.87	1.00	17.04	0	93.1	61.4	129	14.62	8.20	20	
Benzene	15.49	0.500	17.04	0	90.9	66.9	140	14.87	4.08	20	
Chlorobenzene	15.17	0.500	17.04	0	89.0	73.9	137	15.05	0.794	20	
Toluene	19.35	0.500	17.04	0	114	76.6	123	16.73	14.5	20	
Trichloroethene	16.52	0.500	17.04	0	96.9	69.3	144	15.23	8.13	20	
Surr: Dibromofluoromethane	12.91	0	11.36	0	114	61.2	131	0	0	0	
Surr: 4-Bromofluorobenzene	11.50	0	11.36	0	101	64.1	120	0	0	0	
Surr: Toluene-d8	12.99	0	11.36	0	114	75.1	127	0	0	0	

Qualifiers:
E Value above quantitation range
ND Not Detected at the Reporting Limit
H Holding times for preparation or analysis exceeded
R RPD outside accepted recovery limits
J Analyte detected below quantitation limits
S Spike Recovery outside accepted recovery limits

KLEINFELDER
Bright People. Right Solutions.

0809104

PROJECT NO. 95539
PROJECT NAME CTO
L.P. NO. (PO. NO.)
SAMPLERS: (Signature/Number) JG
RECEIVING LAB: Torrent
INSTRUCTIONS/REMARKS: Std TAT

	DATE MM/DD/YY	SAMPLE I.D. TIME HH-MM-SS	SAMPLE I.D.	MATRIX	NO. OF CONTAINERS	TYPE OF CONTAINERS	VOC 8260	TPH g & d 8015	Fuel Oxy 8260	TDS 160.1	nitrates/nitrites	sulfate/sulfite	Ferrous Iron					INSTRUCTIONS/REMARKS
1	9/16/08	850	MW-1	Wtr	5	VOA ~~Amb~~	X	X	X	X								001A
2		1030	MW-2		10	VAP	X	X	X	X	X	X	X					002A
3		1150	MW-3		5	VA	X	X	X	X								003A
4		950	MW-4		10	VAR	X	X	X	X	X	X	X					004A
5		1120	MW-5		10	VAP	X	X	X	X	X	X	X					005A
6		1235	MW-6		5	VA	X	X	X	X								006A
7		1305	MW-7		5	VA	X	X	X	X								007A
8		1450	MW-2D	Wtr	5	VA	X	X	X									008A
9																		
10																		V= VOA
11																		A= Amber 1 L
12																		P = 250ml Poly
13																		
14																		
15																		
16																		
17																		
18																		
19																		
20																		

Relinquished by: (Signature)	Date/Time	Received by: (Signature)
E. Hayes	9/16 4/6	[illegible]
E. Hayes	9/16/08 4:55pm	[illegible] 4:55 pm

Instructions/Remarks:
Email to
JGravesen@kleinfelder.com
CAlmestad@ " "

Send Results To:
Kleinfelder
1970 Broadway Suite
Oakland CA
Attn: Charlie ~~Alestad~~ Almestad

ENV-02 REV 05/08)

White – Sampler Canary – Return Copy To Shipper Pink – Lab Copy

CHAIN OF CUSTODY

COC № 11524

Torrent
LABORATORY, INC.

November 03, 2008 (Revision 1)

Charlie Almestad
KLEINFELDER
1970 Broadway, Suite 710
Oakland, CA 94612

TEL: (510) 628-9000
FAX (510) 628-9009

RE: 95539 - Revised to correct sample receipt information - See case narrative for detail.
Order No.: 0809187

Dear Charlie Almestad:

Torrent Laboratory, Inc. received 27 samples on 9/25/2008 for the analyses presented in the following report.

All data for associated QC met EPA or laboratory specification(s) except where noted in the case narrative.
Reported data is applicable for only the samples received as part of the order number referenced above.

Torrent Laboratory, Inc, is certified by the State of California, ELAP #1991. If you have any questions regarding these tests results, please feel free to contact the Project Management Team at (408)263-5258;ext: 204.

Sincerely,

Laboratory Director

11/3/08
Date

Patti Sandrock
QA Officer

Torrent
LABORATORY, INC.

Torrent Laboratory, Inc.

Date: *03-Nov-08*

CLIENT: KLEINFELDER
Project: 95539
Lab Order: 0809187

CASE NARRATIVE

Report revised to correct information on cover page regarding number of samples received. Actual samples received from the client were twenty-seven. Upon laboratory receipt, four 4 point composites and one 3 point composite were formed and logged as samples 028 - 032. No sample data or QC data was affected by this revision.

Rev 1 (11/3/08)

483 Sinclair Frontage Rd., Milpitas, CA 95035 | tel: 408.263.5258 | fax: 408.263.8293 | www.torrentlab.com

TORRENT LABORATORY, INC.

483 Sinclair Frontage Road • Milpitas, CA • Phone: (408) 263-5258 • Fax: (408) 263-8293

Visit us at www.torrentlab.com email: analysis@torrentlab.com

Report prepared for: Charlie Almestad
KLEINFELDER

Date Received: 9/25/2008
Date Reported: 10/3/2008

Client Sample ID: T-E2-1-8
Sample Location: CTO
Sample Matrix: SOIL
Date/Time Sampled 9/22/2008 10:15:00 AM

Lab Sample ID: 0809187-001
Date Prepared: 9/29/2008

Parameters	Analysis Method	Date Analyzed	RL	Dilution Factor	MRL	Result	Units	Analytical Batch
Antimony	SW6010B	9/29/2008	5	1	5.0	ND	mg/Kg	4626
Arsenic	SW6010B	9/29/2008	1.7	1	1.7	ND	mg/Kg	4626
Barium	SW6010B	9/29/2008	5	1	5.0	62	mg/Kg	4626
Beryllium	SW6010B	9/29/2008	2	1	2.0	ND	mg/Kg	4626
Cadmium	SW6010B	9/29/2008	1	1	1.0	ND	mg/Kg	4626
Chromium	SW6010B	9/29/2008	5	1	5.0	34	mg/Kg	4626
Cobalt	SW6010B	9/29/2008	5	1	5.0	6.0	mg/Kg	4626
Copper	SW6010B	9/29/2008	5	1	5.0	7.0	mg/Kg	4626
Lead	SW6010B	9/29/2008	1	1	1.0	4.2	mg/Kg	4626
Molybdenum	SW6010B	9/29/2008	5	1	5.0	ND	mg/Kg	4626
Nickel	SW6010B	9/29/2008	5	1	5.0	31	mg/Kg	4626
Selenium	SW6010B	9/29/2008	5	1	5.0	ND	mg/Kg	4626
Silver	SW6010B	9/29/2008	1	1	1.0	1.1	mg/Kg	4626
Thallium	SW6010B	9/29/2008	5	1	5.0	ND	mg/Kg	4626
Vanadium	SW6010B	9/29/2008	5	1	5.0	27	mg/Kg	4626
Zinc	SW6010B	9/29/2008	5	1	5.0	19	mg/Kg	4626
Mercury	SW7471A	9/30/2008	0.1	1	0.10	ND	mg/Kg	4632
TPH (Diesel)	SW8015B	9/30/2008	2	1	2.00	ND	mg/Kg	R17488
Surr: Pentacosane	SW8015B	9/30/2008	0	1	59.7-129	67.8	%REC	R17488
TPH (Gasoline)	SW8015B	10/3/2008	0.1	1	0.100	0.29x	mg/Kg	G17507
Surr: Trifluorotoluene	SW8015B	10/3/2008	0	1	65-135	87.8	%REC	G17507

Note: x- Sample chromatogram does not resemble gasoline standard pattern. Reported TPH value due to the presence of significant amount of heavy hydrocarbons.

These analyses were performed according to State of California Environmental Laboratory Accreditation program, Certificate # 1991

Report prepared for: Charlie Almestad
KLEINFELDER

Date Received: 9/25/2008
Date Reported: 10/3/2008

Client Sample ID: T-E2-1-8
Sample Location: CTO
Sample Matrix: SOIL
Date/Time Sampled 9/22/2008 10:15:00 AM

Lab Sample ID: 0809187-001
Date Prepared: 9/29/2008

Parameters	Analysis Method	Date Analyzed	RL	Dilution Factor	MRL	Result	Units	Analytical Batch
1,1,1,2-Tetrachloroethane	SW8260B	9/30/2008	10	1	10	ND	µg/Kg	R17471
1,1,1-Trichloroethane	SW8260B	9/30/2008	10	1	10	ND	µg/Kg	R17471
1,1,2,2-Tetrachloroethane	SW8260B	9/30/2008	10	1	10	ND	µg/Kg	R17471
1,1,2-Trichloroethane	SW8260B	9/30/2008	10	1	10	ND	µg/Kg	R17471
1,1-Dichloroethane	SW8260B	9/30/2008	10	1	10	ND	µg/Kg	R17471
1,1-Dichloroethene	SW8260B	9/30/2008	10	1	10	ND	µg/Kg	R17471
1,1-Dichloropropene	SW8260B	9/30/2008	10	1	10	ND	µg/Kg	R17471
1,2,3-Trichlorobenzene	SW8260B	9/30/2008	10	1	10	ND	µg/Kg	R17471
1,2,3-Trichloropropane	SW8260B	9/30/2008	10	1	10	ND	µg/Kg	R17471
1,2,4-Trichlorobenzene	SW8260B	9/30/2008	10	1	10	ND	µg/Kg	R17471
1,2,4-Trimethylbenzene	SW8260B	9/30/2008	10	1	10	ND	µg/Kg	R17471
1,2-Dibromo-3-chloropropane	SW8260B	9/30/2008	10	1	10	ND	µg/Kg	R17471
1,2-Dibromoethane (EDB)	SW8260B	9/30/2008	10	1	10	ND	µg/Kg	R17471
1,2-Dichlorobenzene	SW8260B	9/30/2008	10	1	10	ND	µg/Kg	R17471
1,2-Dichloroethane (EDC)	SW8260B	9/30/2008	10	1	10	ND	µg/Kg	R17471
1,2-Dichloropropane	SW8260B	9/30/2008	10	1	10	ND	µg/Kg	R17471
1,3,5-Trimethylbenzene	SW8260B	9/30/2008	10	1	10	ND	µg/Kg	R17471
1,3-Dichlorobenzene	SW8260B	9/30/2008	10	1	10	ND	µg/Kg	R17471
1,4-Dichlorobenzene	SW8260B	9/30/2008	10	1	10	ND	µg/Kg	R17471
2,2-Dichloropropane	SW8260B	9/30/2008	10	1	10	ND	µg/Kg	R17471
2-Chloroethyl vinyl ether	SW8260B	9/30/2008	10	1	10	ND	µg/Kg	R17471
2-Chlorotoluene	SW8260B	9/30/2008	10	1	10	ND	µg/Kg	R17471
4-Chlorotoluene	SW8260B	9/30/2008	10	1	10	ND	µg/Kg	R17471
4-Isopropyltoluene	SW8260B	9/30/2008	10	1	10	ND	µg/Kg	R17471
Benzene	SW8260B	9/30/2008	10	1	10	ND	µg/Kg	R17471
Bromobenzene	SW8260B	9/30/2008	10	1	10	ND	µg/Kg	R17471
Bromochloromethane	SW8260B	9/30/2008	10	1	10	ND	µg/Kg	R17471
Bromodichloromethane	SW8260B	9/30/2008	10	1	10	ND	µg/Kg	R17471
Bromoform	SW8260B	9/30/2008	10	1	10	ND	µg/Kg	R17471
Bromomethane	SW8260B	9/30/2008	10	1	10	ND	µg/Kg	R17471
Carbon tetrachloride	SW8260B	9/30/2008	10	1	10	ND	µg/Kg	R17471
Chlorobenzene	SW8260B	9/30/2008	10	1	10	ND	µg/Kg	R17471
Chloroform	SW8260B	9/30/2008	10	1	10	ND	µg/Kg	R17471
Chloromethane	SW8260B	9/30/2008	10	1	10	ND	µg/Kg	R17471
cis-1,2-Dichloroethene	SW8260B	9/30/2008	10	1	10	ND	µg/Kg	R17471
cis-1,3-Dichloropropene	SW8260B	9/30/2008	10	1	10	ND	µg/Kg	R17471
Dibromochloromethane	SW8260B	9/30/2008	10	1	10	ND	µg/Kg	R17471
Dibromomethane	SW8260B	9/30/2008	10	1	10	ND	µg/Kg	R17471
Dichlorodifluoromethane	SW8260B	9/30/2008	10	1	10	ND	µg/Kg	R17471
Ethyl tert-butyl ether (ETBE)	SW8260B	9/30/2008	10	1	10	ND	µg/Kg	R17471
Ethylbenzene	SW8260B	9/30/2008	10	1	10	ND	µg/Kg	R17471
Freon-113	SW8260B	9/30/2008	10	1	10	ND	µg/Kg	R17471
Hexachlorobutadiene	SW8260B	9/30/2008	10	1	10	ND	µg/Kg	R17471

These analyses were performed according to State of California Environmental Laboratory Accreditation program, Certificate # 1991

Report prepared for: Charlie Almestad
KLEINFELDER

Date Received: 9/25/2008
Date Reported: 10/3/2008

Client Sample ID: T-E2-1-8
Sample Location: CTO
Sample Matrix: SOIL
Date/Time Sampled 9/22/2008 10:15:00 AM

Lab Sample ID: 0809187-001
Date Prepared: 9/29/2008

Parameters	Analysis Method	Date Analyzed	RL	Dilution Factor	MRL	Result	Units	Analytical Batch
Isopropyl Ether	SW8260B	9/30/2008	10	1	10	ND	µg/Kg	R17471
Isopropylbenzene	SW8260B	9/30/2008	10	1	10	ND	µg/Kg	R17471
Methyl tert-butyl ether (MTBE)	SW8260B	9/30/2008	10	1	10	ND	µg/Kg	R17471
Methylene chloride	SW8260B	9/30/2008	50	1	50	ND	µg/Kg	R17471
Naphthalene	SW8260B	9/30/2008	20	1	20	ND	µg/Kg	R17471
n-Butylbenzene	SW8260B	9/30/2008	10	1	10	ND	µg/Kg	R17471
n-Propylbenzene	SW8260B	9/30/2008	10	1	10	ND	µg/Kg	R17471
sec-Butylbenzene	SW8260B	9/30/2008	10	1	10	ND	µg/Kg	R17471
Styrene	SW8260B	9/30/2008	10	1	10	ND	µg/Kg	R17471
t-Butyl alcohol (t-Butanol)	SW8260B	9/30/2008	50	1	50	ND	µg/Kg	R17471
tert-Amyl methyl ether (TAME)	SW8260B	9/30/2008	10	1	10	ND	µg/Kg	R17471
tert-Butylbenzene	SW8260B	9/30/2008	10	1	10	ND	µg/Kg	R17471
Tetrachloroethene	SW8260B	9/30/2008	10	1	10	ND	µg/Kg	R17471
Toluene	SW8260B	9/30/2008	10	1	10	ND	µg/Kg	R17471
trans-1,2-Dichloroethene	SW8260B	9/30/2008	10	1	10	ND	µg/Kg	R17471
trans-1,3-Dichloropropene	SW8260B	9/30/2008	10	1	10	ND	µg/Kg	R17471
Trichloroethene	SW8260B	9/30/2008	10	1	10	ND	µg/Kg	R17471
Trichlorofluoromethane	SW8260B	9/30/2008	10	1	10	ND	µg/Kg	R17471
Vinyl chloride	SW8260B	9/30/2008	10	1	10	ND	µg/Kg	R17471
Xylenes, Total	SW8260B	9/30/2008	15	1	15	ND	µg/Kg	R17471
Surr: 4-Bromofluorobenzene	SW8260B	9/30/2008	0	1	55.8-141	100	%REC	R17471
Surr: Dibromofluoromethane	SW8260B	9/30/2008	0	1	59.8-148	89.4	%REC	R17471
Surr: Toluene-d8	SW8260B	9/30/2008	0	1	55.2-133	84.6	%REC	R17471

These analyses were performed according to State of California Environmental Laboratory Accreditation program, Certificate # 1991

Report prepared for: Charlie Almestad
KLEINFELDER

Date Received: 9/25/2008
Date Reported: 10/3/2008

Client Sample ID: T-E2-1-8
Sample Location: CTO
Sample Matrix: SOIL
Date/Time Sampled 9/22/2008 10:15:00 AM

Lab Sample ID: 0809187-001
Date Prepared: 9/29/2008

Parameters	Analysis Method	Date Analyzed	RL	Dilution Factor	MRL	Result	Units	Analytical Batch
1,2,4-Trichlorobenzene	SW8270C	10/1/2008	0.33	1	0.330	ND	mg/Kg	R17469
1,2-Dichlorobenzene	SW8270C	10/1/2008	0.33	1	0.330	ND	mg/Kg	R17469
1,3-Dichlorobenzene	SW8270C	10/1/2008	0.33	1	0.330	ND	mg/Kg	R17469
1,4-Dichlorobenzene	SW8270C	10/1/2008	0.33	1	0.330	ND	mg/Kg	R17469
2,4,5-Trichlorophenol	SW8270C	10/1/2008	0.33	1	0.330	ND	mg/Kg	R17469
2,4,6-Trichlorophenol	SW8270C	10/1/2008	0.33	1	0.330	ND	mg/Kg	R17469
2,4-Dichlorophenol	SW8270C	10/1/2008	0.33	1	0.330	ND	mg/Kg	R17469
2,4-Dimethylphenol	SW8270C	10/1/2008	0.66	1	0.660	ND	mg/Kg	R17469
2,4-Dinitrophenol	SW8270C	10/1/2008	1.7	1	1.70	ND	mg/Kg	R17469
2,4-Dinitrotoluene	SW8270C	10/1/2008	0.33	1	0.330	ND	mg/Kg	R17469
2,6-Dinitrotoluene	SW8270C	10/1/2008	0.33	1	0.330	ND	mg/Kg	R17469
2-Chloronaphthalene	SW8270C	10/1/2008	0.33	1	0.330	ND	mg/Kg	R17469
2-Chlorophenol	SW8270C	10/1/2008	0.33	1	0.330	ND	mg/Kg	R17469
2-Methylnaphthalene	SW8270C	10/1/2008	0.33	1	0.330	ND	mg/Kg	R17469
2-Methylphenol	SW8270C	10/1/2008	0.33	1	0.330	ND	mg/Kg	R17469
2-Nitroaniline	SW8270C	10/1/2008	0.33	1	0.330	ND	mg/Kg	R17469
2-Nitrophenol	SW8270C	10/1/2008	0.66	1	0.660	ND	mg/Kg	R17469
3,3´-Dichlorobenzidine	SW8270C	10/1/2008	1.7	1	1.70	ND	mg/Kg	R17469
3-Methylphenol	SW8270C	10/1/2008	0.33	1	0.330	ND	mg/Kg	R17469
3-Nitroaniline	SW8270C	10/1/2008	0.33	1	0.330	ND	mg/Kg	R17469
4,6-Dinitro-2-methylphenol	SW8270C	10/1/2008	0.33	1	0.330	ND	mg/Kg	R17469
4-Bromophenyl phenyl ether	SW8270C	10/1/2008	0.33	1	0.330	ND	mg/Kg	R17469
4-Chloro-3-methylphenol	SW8270C	10/1/2008	0.33	1	0.330	ND	mg/Kg	R17469
4-Chloroaniline	SW8270C	10/1/2008	0.33	1	0.330	ND	mg/Kg	R17469
4-Chlorophenyl phenyl ether	SW8270C	10/1/2008	0.33	1	0.330	ND	mg/Kg	R17469
4-Methylphenol	SW8270C	10/1/2008	0.33	1	0.330	ND	mg/Kg	R17469
4-Nitroaniline	SW8270C	10/1/2008	0.33	1	0.330	ND	mg/Kg	R17469
4-Nitrophenol	SW8270C	10/1/2008	0.33	1	0.330	ND	mg/Kg	R17469
Acenaphthene	SW8270C	10/1/2008	0.33	1	0.330	ND	mg/Kg	R17469
Acenaphthylene	SW8270C	10/1/2008	0.33	1	0.330	ND	mg/Kg	R17469
Aniline	SW8270C	10/1/2008	0.33	1	0.330	ND	mg/Kg	R17469
Anthracene	SW8270C	10/1/2008	0.33	1	0.330	ND	mg/Kg	R17469
Benz(a)anthracene	SW8270C	10/1/2008	0.33	1	0.330	ND	mg/Kg	R17469
Benzidine	SW8270C	10/1/2008	3.3	1	3.30	ND	mg/Kg	R17469
Benzo(g,h,i)perylene	SW8270C	10/1/2008	0.33	1	0.330	ND	mg/Kg	R17469
Benzo[a]pyrene	SW8270C	10/1/2008	0.33	1	0.330	ND	mg/Kg	R17469
Benzo[b]fluoranthene	SW8270C	10/1/2008	0.33	1	0.330	ND	mg/Kg	R17469
Benzo[k]fluoranthene	SW8270C	10/1/2008	0.33	1	0.330	ND	mg/Kg	R17469
Benzoic acid	SW8270C	10/1/2008	6.66	1	6.66	ND	mg/Kg	R17469
Benzyl alcohol	SW8270C	10/1/2008	6.66	1	6.66	ND	mg/Kg	R17469
Bis(2-chloroethoxy)methane	SW8270C	10/1/2008	0.33	1	0.330	ND	mg/Kg	R17469
Bis(2-chloroethyl)ether	SW8270C	10/1/2008	0.33	1	0.330	ND	mg/Kg	R17469
Bis(2-chloroisopropyl)ether	SW8270C	10/1/2008	0.33	1	0.330	ND	mg/Kg	R17469

These analyses were performed according to State of California Environmental Laboratory Accreditation program, Certificate # 1991

Report prepared for: Charlie Almestad
KLEINFELDER

Date Received: 9/25/2008
Date Reported: 10/3/2008

Client Sample ID: T-E2-1-8
Sample Location: CTO
Sample Matrix: SOIL
Date/Time Sampled 9/22/2008 10:15:00 AM

Lab Sample ID: 0809187-001
Date Prepared: 9/29/2008

Parameters	Analysis Method	Date Analyzed	RL	Dilution Factor	MRL	Result	Units	Analytical Batch
Bis(2-ethylhexyl)phthalate	SW8270C	10/1/2008	3.3	1	3.30	ND	mg/Kg	R17469
Butyl benzyl phthalate	SW8270C	10/1/2008	0.33	1	0.330	ND	mg/Kg	R17469
Chrysene	SW8270C	10/1/2008	0.66	1	0.660	ND	mg/Kg	R17469
Dibenz(a,h)anthracene	SW8270C	10/1/2008	0.33	1	0.330	ND	mg/Kg	R17469
Dibenzofuran	SW8270C	10/1/2008	0.33	1	0.330	ND	mg/Kg	R17469
Diethyl phthalate	SW8270C	10/1/2008	3.3	1	3.30	ND	mg/Kg	R17469
Dimethyl phthalate	SW8270C	10/1/2008	3.3	1	3.30	ND	mg/Kg	R17469
Di-n-butyl phthalate	SW8270C	10/1/2008	3.3	1	3.30	ND	mg/Kg	R17469
Di-n-octyl phthalate	SW8270C	10/1/2008	0.33	1	0.330	ND	mg/Kg	R17469
Fluoranthene	SW8270C	10/1/2008	0.33	1	0.330	ND	mg/Kg	R17469
Fluorene	SW8270C	10/1/2008	0.33	1	0.330	ND	mg/Kg	R17469
Hexachlorobenzene	SW8270C	10/1/2008	0.33	1	0.330	ND	mg/Kg	R17469
Hexachlorobutadiene	SW8270C	10/1/2008	0.33	1	0.330	ND	mg/Kg	R17469
Hexachlorocyclopentadiene	SW8270C	10/1/2008	0.33	1	0.330	ND	mg/Kg	R17469
Hexachloroethane	SW8270C	10/1/2008	0.33	1	0.330	ND	mg/Kg	R17469
Indeno(1,2,3-cd)pyrene	SW8270C	10/1/2008	0.33	1	0.330	ND	mg/Kg	R17469
Isophorone	SW8270C	10/1/2008	0.33	1	0.330	ND	mg/Kg	R17469
Naphthalene	SW8270C	10/1/2008	0.33	1	0.330	ND	mg/Kg	R17469
Nitrobenzene	SW8270C	10/1/2008	0.33	1	0.330	ND	mg/Kg	R17469
N-Nitrosodimethylamine	SW8270C	10/1/2008	0.33	1	0.330	ND	mg/Kg	R17469
N-Nitrosodi-n-propylamine	SW8270C	10/1/2008	0.33	1	0.330	ND	mg/Kg	R17469
N-Nitrosodiphenylamine	SW8270C	10/1/2008	0.33	1	0.330	ND	mg/Kg	R17469
Pentachlorophenol	SW8270C	10/1/2008	0.33	1	0.330	ND	mg/Kg	R17469
Phenanthrene	SW8270C	10/1/2008	0.33	1	0.330	ND	mg/Kg	R17469
Phenol	SW8270C	10/1/2008	0.33	1	0.330	ND	mg/Kg	R17469
Pyrene	SW8270C	10/1/2008	0.33	1	0.330	ND	mg/Kg	R17469
Surr: 2,4,6-Tribromophenol	SW8270C	10/1/2008	0	1	16.5-114	50.3	%REC	R17469
Surr: 2-Fluorobiphenyl	SW8270C	10/1/2008	0	1	24.1-85.6	24.1	%REC	R17469
Surr: 2-Fluorophenol	SW8270C	10/1/2008	0	1	30.3-76.6	45.9	%REC	R17469
Surr: Nitrobenzene-d5	SW8270C	10/1/2008	0	1	29.4-78.2	29.0	%REC	R17469
Surr: Phenol-d6	SW8270C	10/1/2008	0	1	28.7-84.7	41.9	%REC	R17469
Surr: p-Terphenyl-d14	SW8270C	10/1/2008	0	1	37.9-127	72.9	%REC	R17469

These analyses were performed according to State of California Environmental Laboratory Accreditation program, Certificate # 1991

Report prepared for: Charlie Almestad
KLEINFELDER

Date Received: 9/25/2008
Date Reported: 10/3/2008

Client Sample ID: T-E2-2-3
Sample Location: CTO
Sample Matrix: SOIL
Date/Time Sampled 9/22/2008 11:00:00 AM

Lab Sample ID: 0809187-002
Date Prepared: 9/29/2008

Parameters	Analysis Method	Date Analyzed	RL	Dilution Factor	MRL	Result	Units	Analytical Batch
4,4´-DDD	SW8081A	9/30/2008	2	1	2.00	ND	µg/Kg	R17484
4,4´-DDE	SW8081A	9/30/2008	2	1	2.00	ND	µg/Kg	R17484
4,4´-DDT	SW8081A	9/30/2008	2	1	2.00	ND	µg/Kg	R17484
Aldrin	SW8081A	9/30/2008	2	1	2.00	ND	µg/Kg	R17484
alpha-BHC	SW8081A	9/30/2008	2	1	2.00	ND	µg/Kg	R17484
alpha-Chlordane	SW8081A	9/30/2008	2	1	2.00	ND	µg/Kg	R17484
beta-BHC	SW8081A	9/30/2008	2	1	2.00	ND	µg/Kg	R17484
Chlordane	SW8081A	9/30/2008	20	1	20.0	ND	µg/Kg	R17484
delta-BHC	SW8081A	9/30/2008	2	1	2.00	ND	µg/Kg	R17484
Dieldrin	SW8081A	9/30/2008	2	1	2.00	ND	µg/Kg	R17484
Endosulfan I	SW8081A	9/30/2008	2	1	2.00	ND	µg/Kg	R17484
Endosulfan II	SW8081A	9/30/2008	2	1	2.00	ND	µg/Kg	R17484
Endosulfan sulfate	SW8081A	9/30/2008	2	1	2.00	ND	µg/Kg	R17484
Endrin	SW8081A	9/30/2008	2	1	2.00	ND	µg/Kg	R17484
Endrin aldehyde	SW8081A	9/30/2008	2	1	2.00	ND	µg/Kg	R17484
Endrin ketone	SW8081A	9/30/2008	2	1	2.00	ND	µg/Kg	R17484
gamma-BHC	SW8081A	9/30/2008	2	1	2.00	ND	µg/Kg	R17484
gamma-Chlordane	SW8081A	9/30/2008	2	1	2.00	ND	µg/Kg	R17484
Heptachlor	SW8081A	9/30/2008	2	1	2.00	ND	µg/Kg	R17484
Heptachlor epoxide	SW8081A	9/30/2008	2	1	2.00	ND	µg/Kg	R17484
Methoxychlor	SW8081A	9/30/2008	5	1	5.00	ND	µg/Kg	R17484
Toxaphene	SW8081A	9/30/2008	100	1	100	ND	µg/Kg	R17484
Surr: Decachlorobiphenyl	SW8081A	9/30/2008	0	1	54.6-127	111	%REC	R17484
Surr: Tetrachloro-m-xylene	SW8081A	9/30/2008	0	1	54-122	103	%REC	R17484
Aroclor 1016	SW8082	9/30/2008	0.1	1	0.100	ND	mg/Kg	R17478
Aroclor 1221	SW8082	9/30/2008	0.2	1	0.200	ND	mg/Kg	R17478
Aroclor 1232	SW8082	9/30/2008	0.1	1	0.100	ND	mg/Kg	R17478
Aroclor 1242	SW8082	9/30/2008	0.1	1	0.100	ND	mg/Kg	R17478
Aroclor 1248	SW8082	9/30/2008	0.1	1	0.100	ND	mg/Kg	R17478
Aroclor 1254	SW8082	9/30/2008	0.1	1	0.100	ND	mg/Kg	R17478
Aroclor 1260	SW8082	9/30/2008	0.1	1	0.100	ND	mg/Kg	R17478
Surr: Decachlorobiphenyl	SW8082	9/30/2008	0	1	63.7-126	99.6	%REC	R17478
Surr: Tetrachloro-m-xylene	SW8082	9/30/2008	0	1	51.7-128	107	%REC	R17478

These analyses were performed according to State of California Environmental Laboratory Accreditation program, Certificate # 1991

Report prepared for: Charlie Almestad
KLEINFELDER

Date Received: 9/25/2008
Date Reported: 10/3/2008

Client Sample ID: T-E1-2-8
Sample Location: CTO
Sample Matrix: SOIL
Date/Time Sampled 9/23/2008 8:25:00 AM

Lab Sample ID: 0809187-007
Date Prepared: 10/1/2008

Parameters	Analysis Method	Date Analyzed	RL	Dilution Factor	MRL	Result	Units	Analytical Batch
Antimony	SW6010B	9/29/2008	5	1	5.0	ND	mg/Kg	4626
Arsenic	SW6010B	9/29/2008	1.7	1	1.7	1.7	mg/Kg	4626
Barium	SW6010B	9/29/2008	5	1	5.0	46	mg/Kg	4626
Beryllium	SW6010B	9/29/2008	2	1	2.0	ND	mg/Kg	4626
Cadmium	SW6010B	9/29/2008	1	1	1.0	ND	mg/Kg	4626
Chromium	SW6010B	9/29/2008	5	1	5.0	33	mg/Kg	4626
Cobalt	SW6010B	9/29/2008	5	1	5.0	5.4	mg/Kg	4626
Copper	SW6010B	9/29/2008	5	1	5.0	6.8	mg/Kg	4626
Lead	SW6010B	9/29/2008	1	1	1.0	4.6	mg/Kg	4626
Molybdenum	SW6010B	9/29/2008	5	1	5.0	ND	mg/Kg	4626
Nickel	SW6010B	9/29/2008	5	1	5.0	30	mg/Kg	4626
Selenium	SW6010B	9/29/2008	5	1	5.0	ND	mg/Kg	4626
Silver	SW6010B	9/29/2008	1	1	1.0	ND	mg/Kg	4626
Thallium	SW6010B	9/29/2008	5	1	5.0	ND	mg/Kg	4626
Vanadium	SW6010B	9/29/2008	5	1	5.0	29	mg/Kg	4626
Zinc	SW6010B	9/29/2008	5	1	5.0	19	mg/Kg	4626
Mercury	SW7471A	9/30/2008	0.1	1	0.10	ND	mg/Kg	4632
TPH (Diesel)	SW8015B	9/30/2008	2	1	2.00	30.1	mg/Kg	R17488
Surr: Pentacosane	SW8015B	9/30/2008	0	1	59.7-129	74.3	%REC	R17488
TPH (Gasoline)	SW8015B	10/3/2008	0.1	5	0.500	3.5x	mg/Kg	G17507
Surr: Trifluorotoluene	SW8015B	10/3/2008	0	5	65-135	95.4	%REC	G17507

Note: x- Sample chromatogram does not resemble gasoline standard pattern. Reported TPH value due to the presence of significant amount of heavy hydrocarbons.

These analyses were performed according to State of California Environmental Laboratory Accreditation program, Certificate # 1991

Report prepared for: Charlie Almestad
KLEINFELDER

Date Received: 9/25/2008
Date Reported: 10/3/2008

Client Sample ID: T-E1-2-8
Sample Location: CTO
Sample Matrix: SOIL
Date/Time Sampled 9/23/2008 8:25:00 AM

Lab Sample ID: 0809187-007
Date Prepared: 10/1/2008

Parameters	Analysis Method	Date Analyzed	RL	Dilution Factor	MRL	Result	Units	Analytical Batch
1,1,1,2-Tetrachloroethane	SW8260B	10/1/2008	10	5	50	ND	µg/Kg	R17471
1,1,1-Trichloroethane	SW8260B	10/1/2008	10	5	50	ND	µg/Kg	R17471
1,1,2,2-Tetrachloroethane	SW8260B	10/1/2008	10	5	50	ND	µg/Kg	R17471
1,1,2-Trichloroethane	SW8260B	10/1/2008	10	5	50	ND	µg/Kg	R17471
1,1-Dichloroethane	SW8260B	10/1/2008	10	5	50	ND	µg/Kg	R17471
1,1-Dichloroethene	SW8260B	10/1/2008	10	5	50	ND	µg/Kg	R17471
1,1-Dichloropropene	SW8260B	10/1/2008	10	5	50	ND	µg/Kg	R17471
1,2,3-Trichlorobenzene	SW8260B	10/1/2008	10	5	50	ND	µg/Kg	R17471
1,2,3-Trichloropropane	SW8260B	10/1/2008	10	5	50	ND	µg/Kg	R17471
1,2,4-Trichlorobenzene	SW8260B	10/1/2008	10	5	50	ND	µg/Kg	R17471
1,2,4-Trimethylbenzene	SW8260B	10/1/2008	10	5	50	1000	µg/Kg	R17471
1,2-Dibromo-3-chloropropane	SW8260B	10/1/2008	10	5	50	ND	µg/Kg	R17471
1,2-Dibromoethane (EDB)	SW8260B	10/1/2008	10	5	50	ND	µg/Kg	R17471
1,2-Dichlorobenzene	SW8260B	10/1/2008	10	5	50	ND	µg/Kg	R17471
1,2-Dichloroethane (EDC)	SW8260B	10/1/2008	10	5	50	ND	µg/Kg	R17471
1,2-Dichloropropane	SW8260B	10/1/2008	10	5	50	ND	µg/Kg	R17471
1,3,5-Trimethylbenzene	SW8260B	10/1/2008	10	5	50	380	µg/Kg	R17471
1,3-Dichlorobenzene	SW8260B	10/1/2008	10	5	50	ND	µg/Kg	R17471
1,4-Dichlorobenzene	SW8260B	10/1/2008	10	5	50	ND	µg/Kg	R17471
2,2-Dichloropropane	SW8260B	10/1/2008	10	5	50	ND	µg/Kg	R17471
2-Chloroethyl vinyl ether	SW8260B	10/1/2008	10	5	50	ND	µg/Kg	R17471
2-Chlorotoluene	SW8260B	10/1/2008	10	5	50	ND	µg/Kg	R17471
4-Chlorotoluene	SW8260B	10/1/2008	10	5	50	ND	µg/Kg	R17471
4-Isopropyltoluene	SW8260B	10/1/2008	10	5	50	63	µg/Kg	R17471
Benzene	SW8260B	10/1/2008	10	5	50	ND	µg/Kg	R17471
Bromobenzene	SW8260B	10/1/2008	10	5	50	ND	µg/Kg	R17471
Bromochloromethane	SW8260B	10/1/2008	10	5	50	ND	µg/Kg	R17471
Bromodichloromethane	SW8260B	10/1/2008	10	5	50	ND	µg/Kg	R17471
Bromoform	SW8260B	10/1/2008	10	5	50	ND	µg/Kg	R17471
Bromomethane	SW8260B	10/1/2008	10	5	50	ND	µg/Kg	R17471
Carbon tetrachloride	SW8260B	10/1/2008	10	5	50	ND	µg/Kg	R17471
Chlorobenzene	SW8260B	10/1/2008	10	5	50	ND	µg/Kg	R17471
Chloroform	SW8260B	10/1/2008	10	5	50	ND	µg/Kg	R17471
Chloromethane	SW8260B	10/1/2008	10	5	50	ND	µg/Kg	R17471
cis-1,2-Dichloroethene	SW8260B	10/1/2008	10	5	50	ND	µg/Kg	R17471
cis-1,3-Dichloropropene	SW8260B	10/1/2008	10	5	50	ND	µg/Kg	R17471
Dibromochloromethane	SW8260B	10/1/2008	10	5	50	ND	µg/Kg	R17471
Dibromomethane	SW8260B	10/1/2008	10	5	50	ND	µg/Kg	R17471
Dichlorodifluoromethane	SW8260B	10/1/2008	10	5	50	ND	µg/Kg	R17471
Ethyl tert-butyl ether (ETBE)	SW8260B	10/1/2008	10	5	50	ND	µg/Kg	R17471
Ethylbenzene	SW8260B	10/1/2008	10	5	50	63	µg/Kg	R17471
Freon-113	SW8260B	10/1/2008	10	5	50	ND	µg/Kg	R17471
Hexachlorobutadiene	SW8260B	10/1/2008	10	5	50	ND	µg/Kg	R17471

These analyses were performed according to State of California Environmental Laboratory Accreditation program, Certificate # 1991

Report prepared for: Charlie Almestad
KLEINFELDER

Date Received: 9/25/2008
Date Reported: 10/3/2008

Client Sample ID: T-E1-2-8
Sample Location: CTO
Sample Matrix: SOIL
Date/Time Sampled 9/23/2008 8:25:00 AM

Lab Sample ID: 0809187-007
Date Prepared: 10/1/2008

Parameters	Analysis Method	Date Analyzed	RL	Dilution Factor	MRL	Result	Units	Analytical Batch
Isopropyl Ether	SW8260B	10/1/2008	10	5	50	ND	µg/Kg	R17471
Isopropylbenzene	SW8260B	10/1/2008	10	5	50	ND	µg/Kg	R17471
Methyl tert-butyl ether (MTBE)	SW8260B	10/1/2008	10	5	50	ND	µg/Kg	R17471
Methylene chloride	SW8260B	10/1/2008	50	5	250	ND	µg/Kg	R17471
Naphthalene	SW8260B	10/1/2008	20	5	100	ND	µg/Kg	R17471
n-Butylbenzene	SW8260B	10/1/2008	10	5	50	230	µg/Kg	R17471
n-Propylbenzene	SW8260B	10/1/2008	10	5	50	95	µg/Kg	R17471
sec-Butylbenzene	SW8260B	10/1/2008	10	5	50	ND	µg/Kg	R17471
Styrene	SW8260B	10/1/2008	10	5	50	ND	µg/Kg	R17471
t-Butyl alcohol (t-Butanol)	SW8260B	10/1/2008	50	5	250	ND	µg/Kg	R17471
tert-Amyl methyl ether (TAME)	SW8260B	10/1/2008	10	5	50	ND	µg/Kg	R17471
tert-Butylbenzene	SW8260B	10/1/2008	10	5	50	ND	µg/Kg	R17471
Tetrachloroethene	SW8260B	10/1/2008	10	5	50	ND	µg/Kg	R17471
Toluene	SW8260B	10/1/2008	10	5	50	ND	µg/Kg	R17471
trans-1,2-Dichloroethene	SW8260B	10/1/2008	10	5	50	ND	µg/Kg	R17471
trans-1,3-Dichloropropene	SW8260B	10/1/2008	10	5	50	ND	µg/Kg	R17471
Trichloroethene	SW8260B	10/1/2008	10	5	50	ND	µg/Kg	R17471
Trichlorofluoromethane	SW8260B	10/1/2008	10	5	50	ND	µg/Kg	R17471
Vinyl chloride	SW8260B	10/1/2008	10	5	50	ND	µg/Kg	R17471
Xylenes, Total	SW8260B	10/1/2008	15	5	75	290	µg/Kg	R17471
Surr: 4-Bromofluorobenzene	SW8260B	10/1/2008	0	5	55.8-141	117	%REC	R17471
Surr: Dibromofluoromethane	SW8260B	10/1/2008	0	5	59.8-148	124	%REC	R17471
Surr: Toluene-d8	SW8260B	10/1/2008	0	5	55.2-133	87.1	%REC	R17471

These analyses were performed according to State of California Environmental Laboratory Accreditation program, Certificate # 1991

Report prepared for: Charlie Almestad
KLEINFELDER

Date Received: 9/25/2008
Date Reported: 10/3/2008

Client Sample ID: T-E1-2-8
Sample Location: CTO
Sample Matrix: SOIL
Date/Time Sampled 9/23/2008 8:25:00 AM

Lab Sample ID: 0809187-007
Date Prepared: 10/1/2008

Parameters	Analysis Method	Date Analyzed	RL	Dilution Factor	MRL	Result	Units	Analytical Batch
1,2,4-Trichlorobenzene	SW8270C	10/3/2008	0.33	1	0.330	ND	mg/Kg	R17469
1,2-Dichlorobenzene	SW8270C	10/3/2008	0.33	1	0.330	ND	mg/Kg	R17469
1,3-Dichlorobenzene	SW8270C	10/3/2008	0.33	1	0.330	ND	mg/Kg	R17469
1,4-Dichlorobenzene	SW8270C	10/3/2008	0.33	1	0.330	ND	mg/Kg	R17469
2,4,5-Trichlorophenol	SW8270C	10/3/2008	0.33	1	0.330	ND	mg/Kg	R17469
2,4,6-Trichlorophenol	SW8270C	10/3/2008	0.33	1	0.330	ND	mg/Kg	R17469
2,4-Dichlorophenol	SW8270C	10/3/2008	0.33	1	0.330	ND	mg/Kg	R17469
2,4-Dimethylphenol	SW8270C	10/3/2008	0.66	1	0.660	ND	mg/Kg	R17469
2,4-Dinitrophenol	SW8270C	10/3/2008	1.7	1	1.70	ND	mg/Kg	R17469
2,4-Dinitrotoluene	SW8270C	10/3/2008	0.33	1	0.330	ND	mg/Kg	R17469
2,6-Dinitrotoluene	SW8270C	10/3/2008	0.33	1	0.330	ND	mg/Kg	R17469
2-Chloronaphthalene	SW8270C	10/3/2008	0.33	1	0.330	ND	mg/Kg	R17469
2-Chlorophenol	SW8270C	10/3/2008	0.33	1	0.330	ND	mg/Kg	R17469
2-Methylnaphthalene	SW8270C	10/3/2008	0.33	1	0.330	ND	mg/Kg	R17469
2-Methylphenol	SW8270C	10/3/2008	0.33	1	0.330	ND	mg/Kg	R17469
2-Nitroaniline	SW8270C	10/3/2008	0.33	1	0.330	ND	mg/Kg	R17469
2-Nitrophenol	SW8270C	10/3/2008	0.66	1	0.660	ND	mg/Kg	R17469
3,3´-Dichlorobenzidine	SW8270C	10/3/2008	1.7	1	1.70	ND	mg/Kg	R17469
3-Methylphenol	SW8270C	10/3/2008	0.33	1	0.330	ND	mg/Kg	R17469
3-Nitroaniline	SW8270C	10/3/2008	0.33	1	0.330	ND	mg/Kg	R17469
4,6-Dinitro-2-methylphenol	SW8270C	10/3/2008	0.33	1	0.330	ND	mg/Kg	R17469
4-Bromophenyl phenyl ether	SW8270C	10/3/2008	0.33	1	0.330	ND	mg/Kg	R17469
4-Chloro-3-methylphenol	SW8270C	10/3/2008	0.33	1	0.330	ND	mg/Kg	R17469
4-Chloroaniline	SW8270C	10/3/2008	0.33	1	0.330	ND	mg/Kg	R17469
4-Chlorophenyl phenyl ether	SW8270C	10/3/2008	0.33	1	0.330	ND	mg/Kg	R17469
4-Methylphenol	SW8270C	10/3/2008	0.33	1	0.330	ND	mg/Kg	R17469
4-Nitroaniline	SW8270C	10/3/2008	0.33	1	0.330	ND	mg/Kg	R17469
4-Nitrophenol	SW8270C	10/3/2008	0.33	1	0.330	ND	mg/Kg	R17469
Acenaphthene	SW8270C	10/3/2008	0.33	1	0.330	ND	mg/Kg	R17469
Acenaphthylene	SW8270C	10/3/2008	0.33	1	0.330	ND	mg/Kg	R17469
Aniline	SW8270C	10/3/2008	0.33	1	0.330	ND	mg/Kg	R17469
Anthracene	SW8270C	10/3/2008	0.33	1	0.330	ND	mg/Kg	R17469
Benz(a)anthracene	SW8270C	10/3/2008	0.33	1	0.330	ND	mg/Kg	R17469
Benzidine	SW8270C	10/3/2008	3.3	1	3.30	ND	mg/Kg	R17469
Benzo(g,h,i)perylene	SW8270C	10/3/2008	0.33	1	0.330	ND	mg/Kg	R17469
Benzo[a]pyrene	SW8270C	10/3/2008	0.33	1	0.330	ND	mg/Kg	R17469
Benzo[b]fluoranthene	SW8270C	10/3/2008	0.33	1	0.330	ND	mg/Kg	R17469
Benzo[k]fluoranthene	SW8270C	10/3/2008	0.33	1	0.330	ND	mg/Kg	R17469
Benzoic acid	SW8270C	10/3/2008	6.66	1	6.66	ND	mg/Kg	R17469
Benzyl alcohol	SW8270C	10/3/2008	6.66	1	6.66	ND	mg/Kg	R17469
Bis(2-chloroethoxy)methane	SW8270C	10/3/2008	0.33	1	0.330	ND	mg/Kg	R17469
Bis(2-chloroethyl)ether	SW8270C	10/3/2008	0.33	1	0.330	ND	mg/Kg	R17469
Bis(2-chloroisopropyl)ether	SW8270C	10/3/2008	0.33	1	0.330	ND	mg/Kg	R17469

These analyses were performed according to State of California Environmental Laboratory Accreditation program, Certificate # 1991

Report prepared for: Charlie Almestad
KLEINFELDER

Date Received: 9/25/2008
Date Reported: 10/3/2008

Client Sample ID: T-E1-2-8
Sample Location: CTO
Sample Matrix: SOIL
Date/Time Sampled 9/23/2008 8:25:00 AM

Lab Sample ID: 0809187-007
Date Prepared: 10/1/2008

Parameters	Analysis Method	Date Analyzed	RL	Dilution Factor	MRL	Result	Units	Analytical Batch
Bis(2-ethylhexyl)phthalate	SW8270C	10/3/2008	3.3	1	3.30	ND	mg/Kg	R17469
Butyl benzyl phthalate	SW8270C	10/3/2008	0.33	1	0.330	ND	mg/Kg	R17469
Chrysene	SW8270C	10/3/2008	0.66	1	0.660	ND	mg/Kg	R17469
Dibenz(a,h)anthracene	SW8270C	10/3/2008	0.33	1	0.330	ND	mg/Kg	R17469
Dibenzofuran	SW8270C	10/3/2008	0.33	1	0.330	ND	mg/Kg	R17469
Diethyl phthalate	SW8270C	10/3/2008	3.3	1	3.30	ND	mg/Kg	R17469
Dimethyl phthalate	SW8270C	10/3/2008	3.3	1	3.30	ND	mg/Kg	R17469
Di-n-butyl phthalate	SW8270C	10/3/2008	3.3	1	3.30	ND	mg/Kg	R17469
Di-n-octyl phthalate	SW8270C	10/3/2008	0.33	1	0.330	ND	mg/Kg	R17469
Fluoranthene	SW8270C	10/3/2008	0.33	1	0.330	ND	mg/Kg	R17469
Fluorene	SW8270C	10/3/2008	0.33	1	0.330	ND	mg/Kg	R17469
Hexachlorobenzene	SW8270C	10/3/2008	0.33	1	0.330	ND	mg/Kg	R17469
Hexachlorobutadiene	SW8270C	10/3/2008	0.33	1	0.330	ND	mg/Kg	R17469
Hexachlorocyclopentadiene	SW8270C	10/3/2008	0.33	1	0.330	ND	mg/Kg	R17469
Hexachloroethane	SW8270C	10/3/2008	0.33	1	0.330	ND	mg/Kg	R17469
Indeno(1,2,3-cd)pyrene	SW8270C	10/3/2008	0.33	1	0.330	ND	mg/Kg	R17469
Isophorone	SW8270C	10/3/2008	0.33	1	0.330	ND	mg/Kg	R17469
Naphthalene	SW8270C	10/3/2008	0.33	1	0.330	ND	mg/Kg	R17469
Nitrobenzene	SW8270C	10/3/2008	0.33	1	0.330	ND	mg/Kg	R17469
N-Nitrosodimethylamine	SW8270C	10/3/2008	0.33	1	0.330	ND	mg/Kg	R17469
N-Nitrosodi-n-propylamine	SW8270C	10/3/2008	0.33	1	0.330	ND	mg/Kg	R17469
N-Nitrosodiphenylamine	SW8270C	10/3/2008	0.33	1	0.330	ND	mg/Kg	R17469
Pentachlorophenol	SW8270C	10/3/2008	0.33	1	0.330	ND	mg/Kg	R17469
Phenanthrene	SW8270C	10/3/2008	0.33	1	0.330	ND	mg/Kg	R17469
Phenol	SW8270C	10/3/2008	0.33	1	0.330	ND	mg/Kg	R17469
Pyrene	SW8270C	10/3/2008	0.33	1	0.330	ND	mg/Kg	R17469
Surr: 2,4,6-Tribromophenol	SW8270C	10/3/2008	0	1	16.5-114	40.3	%REC	R17469
Surr: 2-Fluorobiphenyl	SW8270C	10/3/2008	0	1	24.1-85.6	35.4	%REC	R17469
Surr: 2-Fluorophenol	SW8270C	10/3/2008	0	1	30.3-76.6	42.9	%REC	R17469
Surr: Nitrobenzene-d5	SW8270C	10/3/2008	0	1	29.4-78.2	52.1	%REC	R17469
Surr: Phenol-d6	SW8270C	10/3/2008	0	1	28.7-84.7	40.5	%REC	R17469
Surr: p-Terphenyl-d14	SW8270C	10/3/2008	0	1	37.9-127	81.0	%REC	R17469

These analyses were performed according to State of California Environmental Laboratory Accreditation program, Certificate # 1991

Report prepared for: Charlie Almestad
KLEINFELDER

Date Received: 9/25/2008
Date Reported: 10/3/2008

Client Sample ID: T-E1-3-8
Sample Location: CTO
Sample Matrix: SOIL
Date/Time Sampled 9/23/2008 9:00:00 AM

Lab Sample ID: 0809187-008
Date Prepared: 10/1/2008

Parameters	Analysis Method	Date Analyzed	RL	Dilution Factor	MRL	Result	Units	Analytical Batch
Antimony	SW6010B	9/29/2008	5	1	5.0	ND	mg/Kg	4626
Arsenic	SW6010B	9/29/2008	1.7	1	1.7	1.8	mg/Kg	4626
Barium	SW6010B	9/29/2008	5	1	5.0	52	mg/Kg	4626
Beryllium	SW6010B	9/29/2008	2	1	2.0	ND	mg/Kg	4626
Cadmium	SW6010B	9/29/2008	1	1	1.0	ND	mg/Kg	4626
Chromium	SW6010B	9/29/2008	5	1	5.0	34	mg/Kg	4626
Cobalt	SW6010B	9/29/2008	5	1	5.0	6.1	mg/Kg	4626
Copper	SW6010B	9/29/2008	5	1	5.0	6.3	mg/Kg	4626
Lead	SW6010B	9/29/2008	1	1	1.0	2.9	mg/Kg	4626
Molybdenum	SW6010B	9/29/2008	5	1	5.0	ND	mg/Kg	4626
Nickel	SW6010B	9/29/2008	5	1	5.0	28	mg/Kg	4626
Selenium	SW6010B	9/29/2008	5	1	5.0	ND	mg/Kg	4626
Silver	SW6010B	9/29/2008	1	1	1.0	1.1	mg/Kg	4626
Thallium	SW6010B	9/29/2008	5	1	5.0	ND	mg/Kg	4626
Vanadium	SW6010B	9/29/2008	5	1	5.0	26	mg/Kg	4626
Zinc	SW6010B	9/29/2008	5	1	5.0	17	mg/Kg	4626
Mercury	SW7471A	9/30/2008	0.1	1	0.10	ND	mg/Kg	4632
TPH (Diesel)	SW8015B	9/30/2008	2	1	2.00	ND	mg/Kg	R17488
Surr: Pentacosane	SW8015B	9/30/2008	0	1	59.7-129	72.8	%REC	R17488
TPH (Gasoline)	SW8015B	10/3/2008	0.1	1	0.100	0.17x	mg/Kg	G17507
Surr: Trifluorotoluene	SW8015B	10/3/2008	0	1	65-135	89.0	%REC	G17507

Note: x- Sample chromatogram does not resemble gasoline standard pattern. Reported TPH value due to the presence of non-target gasoline compounds within gasoline range.

These analyses were performed according to State of California Environmental Laboratory Accreditation program, Certificate # 1991

Report prepared for: Charlie Almestad
KLEINFELDER

Date Received: 9/25/2008
Date Reported: 10/3/2008

Client Sample ID: T-E1-3-8
Sample Location: CTO
Sample Matrix: SOIL
Date/Time Sampled 9/23/2008 9:00:00 AM

Lab Sample ID: 0809187-008
Date Prepared: 10/1/2008

Parameters	Analysis Method	Date Analyzed	RL	Dilution Factor	MRL	Result	Units	Analytical Batch
1,1,1,2-Tetrachloroethane	SW8260B	10/1/2008	10	1	10	ND	µg/Kg	R17471
1,1,1-Trichloroethane	SW8260B	10/1/2008	10	1	10	ND	µg/Kg	R17471
1,1,2,2-Tetrachloroethane	SW8260B	10/1/2008	10	1	10	ND	µg/Kg	R17471
1,1,2-Trichloroethane	SW8260B	10/1/2008	10	1	10	ND	µg/Kg	R17471
1,1-Dichloroethane	SW8260B	10/1/2008	10	1	10	ND	µg/Kg	R17471
1,1-Dichloroethene	SW8260B	10/1/2008	10	1	10	ND	µg/Kg	R17471
1,1-Dichloropropene	SW8260B	10/1/2008	10	1	10	ND	µg/Kg	R17471
1,2,3-Trichlorobenzene	SW8260B	10/1/2008	10	1	10	ND	µg/Kg	R17471
1,2,3-Trichloropropane	SW8260B	10/1/2008	10	1	10	ND	µg/Kg	R17471
1,2,4-Trichlorobenzene	SW8260B	10/1/2008	10	1	10	ND	µg/Kg	R17471
1,2,4-Trimethylbenzene	SW8260B	10/1/2008	10	1	10	33	µg/Kg	R17471
1,2-Dibromo-3-chloropropane	SW8260B	10/1/2008	10	1	10	ND	µg/Kg	R17471
1,2-Dibromoethane (EDB)	SW8260B	10/1/2008	10	1	10	ND	µg/Kg	R17471
1,2-Dichlorobenzene	SW8260B	10/1/2008	10	1	10	ND	µg/Kg	R17471
1,2-Dichloroethane (EDC)	SW8260B	10/1/2008	10	1	10	ND	µg/Kg	R17471
1,2-Dichloropropane	SW8260B	10/1/2008	10	1	10	ND	µg/Kg	R17471
1,3,5-Trimethylbenzene	SW8260B	10/1/2008	10	1	10	ND	µg/Kg	R17471
1,3-Dichlorobenzene	SW8260B	10/1/2008	10	1	10	ND	µg/Kg	R17471
1,4-Dichlorobenzene	SW8260B	10/1/2008	10	1	10	ND	µg/Kg	R17471
2,2-Dichloropropane	SW8260B	10/1/2008	10	1	10	ND	µg/Kg	R17471
2-Chloroethyl vinyl ether	SW8260B	10/1/2008	10	1	10	ND	µg/Kg	R17471
2-Chlorotoluene	SW8260B	10/1/2008	10	1	10	ND	µg/Kg	R17471
4-Chlorotoluene	SW8260B	10/1/2008	10	1	10	ND	µg/Kg	R17471
4-Isopropyltoluene	SW8260B	10/1/2008	10	1	10	ND	µg/Kg	R17471
Benzene	SW8260B	10/1/2008	10	1	10	ND	µg/Kg	R17471
Bromobenzene	SW8260B	10/1/2008	10	1	10	ND	µg/Kg	R17471
Bromochloromethane	SW8260B	10/1/2008	10	1	10	ND	µg/Kg	R17471
Bromodichloromethane	SW8260B	10/1/2008	10	1	10	ND	µg/Kg	R17471
Bromoform	SW8260B	10/1/2008	10	1	10	ND	µg/Kg	R17471
Bromomethane	SW8260B	10/1/2008	10	1	10	ND	µg/Kg	R17471
Carbon tetrachloride	SW8260B	10/1/2008	10	1	10	ND	µg/Kg	R17471
Chlorobenzene	SW8260B	10/1/2008	10	1	10	ND	µg/Kg	R17471
Chloroform	SW8260B	10/1/2008	10	1	10	ND	µg/Kg	R17471
Chloromethane	SW8260B	10/1/2008	10	1	10	ND	µg/Kg	R17471
cis-1,2-Dichloroethene	SW8260B	10/1/2008	10	1	10	ND	µg/Kg	R17471
cis-1,3-Dichloropropene	SW8260B	10/1/2008	10	1	10	ND	µg/Kg	R17471
Dibromochloromethane	SW8260B	10/1/2008	10	1	10	ND	µg/Kg	R17471
Dibromomethane	SW8260B	10/1/2008	10	1	10	ND	µg/Kg	R17471
Dichlorodifluoromethane	SW8260B	10/1/2008	10	1	10	ND	µg/Kg	R17471
Ethyl tert-butyl ether (ETBE)	SW8260B	10/1/2008	10	1	10	ND	µg/Kg	R17471
Ethylbenzene	SW8260B	10/1/2008	10	1	10	ND	µg/Kg	R17471
Freon-113	SW8260B	10/1/2008	10	1	10	ND	µg/Kg	R17471
Hexachlorobutadiene	SW8260B	10/1/2008	10	1	10	ND	µg/Kg	R17471

These analyses were performed according to State of California Environmental Laboratory Accreditation program, Certificate # 1991

Report prepared for: Charlie Almestad
KLEINFELDER

Date Received: 9/25/2008
Date Reported: 10/3/2008

Client Sample ID: T-E1-3-8
Sample Location: CTO
Sample Matrix: SOIL
Date/Time Sampled 9/23/2008 9:00:00 AM

Lab Sample ID: 0809187-008
Date Prepared: 10/1/2008

Parameters	Analysis Method	Date Analyzed	RL	Dilution Factor	MRL	Result	Units	Analytical Batch
Isopropyl Ether	SW8260B	10/1/2008	10	1	10	ND	µg/Kg	R17471
Isopropylbenzene	SW8260B	10/1/2008	10	1	10	ND	µg/Kg	R17471
Methyl tert-butyl ether (MTBE)	SW8260B	10/1/2008	10	1	10	ND	µg/Kg	R17471
Methylene chloride	SW8260B	10/1/2008	50	1	50	ND	µg/Kg	R17471
Naphthalene	SW8260B	10/1/2008	20	1	20	ND	µg/Kg	R17471
n-Butylbenzene	SW8260B	10/1/2008	10	1	10	ND	µg/Kg	R17471
n-Propylbenzene	SW8260B	10/1/2008	10	1	10	ND	µg/Kg	R17471
sec-Butylbenzene	SW8260B	10/1/2008	10	1	10	ND	µg/Kg	R17471
Styrene	SW8260B	10/1/2008	10	1	10	ND	µg/Kg	R17471
t-Butyl alcohol (t-Butanol)	SW8260B	10/1/2008	50	1	50	ND	µg/Kg	R17471
tert-Amyl methyl ether (TAME)	SW8260B	10/1/2008	10	1	10	ND	µg/Kg	R17471
tert-Butylbenzene	SW8260B	10/1/2008	10	1	10	ND	µg/Kg	R17471
Tetrachloroethene	SW8260B	10/1/2008	10	1	10	ND	µg/Kg	R17471
Toluene	SW8260B	10/1/2008	10	1	10	ND	µg/Kg	R17471
trans-1,2-Dichloroethene	SW8260B	10/1/2008	10	1	10	ND	µg/Kg	R17471
trans-1,3-Dichloropropene	SW8260B	10/1/2008	10	1	10	ND	µg/Kg	R17471
Trichloroethene	SW8260B	10/1/2008	10	1	10	ND	µg/Kg	R17471
Trichlorofluoromethane	SW8260B	10/1/2008	10	1	10	ND	µg/Kg	R17471
Vinyl chloride	SW8260B	10/1/2008	10	1	10	ND	µg/Kg	R17471
Xylenes, Total	SW8260B	10/1/2008	15	1	15	ND	µg/Kg	R17471
Surr: 4-Bromofluorobenzene	SW8260B	10/1/2008	0	1	55.8-141	116	%REC	R17471
Surr: Dibromofluoromethane	SW8260B	10/1/2008	0	1	59.8-148	122	%REC	R17471
Surr: Toluene-d8	SW8260B	10/1/2008	0	1	55.2-133	92.5	%REC	R17471

These analyses were performed according to State of California Environmental Laboratory Accreditation program, Certificate # 1991

Report prepared for: Charlie Almestad
KLEINFELDER

Date Received: 9/25/2008
Date Reported: 10/3/2008

Client Sample ID: T-E1-3-8
Sample Location: CTO
Sample Matrix: SOIL
Date/Time Sampled 9/23/2008 9:00:00 AM

Lab Sample ID: 0809187-008
Date Prepared: 10/1/2008

Parameters	Analysis Method	Date Analyzed	RL	Dilution Factor	MRL	Result	Units	Analytical Batch
1,2,4-Trichlorobenzene	SW8270C	10/1/2008	0.33	1	0.330	ND	mg/Kg	R17469
1,2-Dichlorobenzene	SW8270C	10/1/2008	0.33	1	0.330	ND	mg/Kg	R17469
1,3-Dichlorobenzene	SW8270C	10/1/2008	0.33	1	0.330	ND	mg/Kg	R17469
1,4-Dichlorobenzene	SW8270C	10/1/2008	0.33	1	0.330	ND	mg/Kg	R17469
2,4,5-Trichlorophenol	SW8270C	10/1/2008	0.33	1	0.330	ND	mg/Kg	R17469
2,4,6-Trichlorophenol	SW8270C	10/1/2008	0.33	1	0.330	ND	mg/Kg	R17469
2,4-Dichlorophenol	SW8270C	10/1/2008	0.33	1	0.330	ND	mg/Kg	R17469
2,4-Dimethylphenol	SW8270C	10/1/2008	0.66	1	0.660	ND	mg/Kg	R17469
2,4-Dinitrophenol	SW8270C	10/1/2008	1.7	1	1.70	ND	mg/Kg	R17469
2,4-Dinitrotoluene	SW8270C	10/1/2008	0.33	1	0.330	ND	mg/Kg	R17469
2,6-Dinitrotoluene	SW8270C	10/1/2008	0.33	1	0.330	ND	mg/Kg	R17469
2-Chloronaphthalene	SW8270C	10/1/2008	0.33	1	0.330	ND	mg/Kg	R17469
2-Chlorophenol	SW8270C	10/1/2008	0.33	1	0.330	ND	mg/Kg	R17469
2-Methylnaphthalene	SW8270C	10/1/2008	0.33	1	0.330	ND	mg/Kg	R17469
2-Methylphenol	SW8270C	10/1/2008	0.33	1	0.330	ND	mg/Kg	R17469
2-Nitroaniline	SW8270C	10/1/2008	0.33	1	0.330	ND	mg/Kg	R17469
2-Nitrophenol	SW8270C	10/1/2008	0.66	1	0.660	ND	mg/Kg	R17469
3,3´-Dichlorobenzidine	SW8270C	10/1/2008	1.7	1	1.70	ND	mg/Kg	R17469
3-Methylphenol	SW8270C	10/1/2008	0.33	1	0.330	ND	mg/Kg	R17469
3-Nitroaniline	SW8270C	10/1/2008	0.33	1	0.330	ND	mg/Kg	R17469
4,6-Dinitro-2-methylphenol	SW8270C	10/1/2008	0.33	1	0.330	ND	mg/Kg	R17469
4-Bromophenyl phenyl ether	SW8270C	10/1/2008	0.33	1	0.330	ND	mg/Kg	R17469
4-Chloro-3-methylphenol	SW8270C	10/1/2008	0.33	1	0.330	ND	mg/Kg	R17469
4-Chloroaniline	SW8270C	10/1/2008	0.33	1	0.330	ND	mg/Kg	R17469
4-Chlorophenyl phenyl ether	SW8270C	10/1/2008	0.33	1	0.330	ND	mg/Kg	R17469
4-Methylphenol	SW8270C	10/1/2008	0.33	1	0.330	ND	mg/Kg	R17469
4-Nitroaniline	SW8270C	10/1/2008	0.33	1	0.330	ND	mg/Kg	R17469
4-Nitrophenol	SW8270C	10/1/2008	0.33	1	0.330	ND	mg/Kg	R17469
Acenaphthene	SW8270C	10/1/2008	0.33	1	0.330	ND	mg/Kg	R17469
Acenaphthylene	SW8270C	10/1/2008	0.33	1	0.330	ND	mg/Kg	R17469
Aniline	SW8270C	10/1/2008	0.33	1	0.330	ND	mg/Kg	R17469
Anthracene	SW8270C	10/1/2008	0.33	1	0.330	ND	mg/Kg	R17469
Benz(a)anthracene	SW8270C	10/1/2008	0.33	1	0.330	ND	mg/Kg	R17469
Benzidine	SW8270C	10/1/2008	3.3	1	3.30	ND	mg/Kg	R17469
Benzo(g,h,i)perylene	SW8270C	10/1/2008	0.33	1	0.330	ND	mg/Kg	R17469
Benzo[a]pyrene	SW8270C	10/1/2008	0.33	1	0.330	ND	mg/Kg	R17469
Benzo[b]fluoranthene	SW8270C	10/1/2008	0.33	1	0.330	ND	mg/Kg	R17469
Benzo[k]fluoranthene	SW8270C	10/1/2008	0.33	1	0.330	ND	mg/Kg	R17469
Benzoic acid	SW8270C	10/1/2008	6.66	1	6.66	ND	mg/Kg	R17469
Benzyl alcohol	SW8270C	10/1/2008	6.66	1	6.66	ND	mg/Kg	R17469
Bis(2-chloroethoxy)methane	SW8270C	10/1/2008	0.33	1	0.330	ND	mg/Kg	R17469
Bis(2-chloroethyl)ether	SW8270C	10/1/2008	0.33	1	0.330	ND	mg/Kg	R17469
Bis(2-chloroisopropyl)ether	SW8270C	10/1/2008	0.33	1	0.330	ND	mg/Kg	R17469

These analyses were performed according to State of California Environmental Laboratory Accreditation program, Certificate # 1991

Report prepared for: Charlie Almestad
KLEINFELDER

Date Received: 9/25/2008
Date Reported: 10/3/2008

Client Sample ID: T-E1-3-8
Sample Location: CTO
Sample Matrix: SOIL
Date/Time Sampled 9/23/2008 9:00:00 AM

Lab Sample ID: 0809187-008
Date Prepared: 10/1/2008

Parameters	Analysis Method	Date Analyzed	RL	Dilution Factor	MRL	Result	Units	Analytical Batch
Bis(2-ethylhexyl)phthalate	SW8270C	10/1/2008	3.3	1	3.30	ND	mg/Kg	R17469
Butyl benzyl phthalate	SW8270C	10/1/2008	0.33	1	0.330	ND	mg/Kg	R17469
Chrysene	SW8270C	10/1/2008	0.66	1	0.660	ND	mg/Kg	R17469
Dibenz(a,h)anthracene	SW8270C	10/1/2008	0.33	1	0.330	ND	mg/Kg	R17469
Dibenzofuran	SW8270C	10/1/2008	0.33	1	0.330	ND	mg/Kg	R17469
Diethyl phthalate	SW8270C	10/1/2008	3.3	1	3.30	ND	mg/Kg	R17469
Dimethyl phthalate	SW8270C	10/1/2008	3.3	1	3.30	ND	mg/Kg	R17469
Di-n-butyl phthalate	SW8270C	10/1/2008	3.3	1	3.30	ND	mg/Kg	R17469
Di-n-octyl phthalate	SW8270C	10/1/2008	0.33	1	0.330	ND	mg/Kg	R17469
Fluoranthene	SW8270C	10/1/2008	0.33	1	0.330	ND	mg/Kg	R17469
Fluorene	SW8270C	10/1/2008	0.33	1	0.330	ND	mg/Kg	R17469
Hexachlorobenzene	SW8270C	10/1/2008	0.33	1	0.330	ND	mg/Kg	R17469
Hexachlorobutadiene	SW8270C	10/1/2008	0.33	1	0.330	ND	mg/Kg	R17469
Hexachlorocyclopentadiene	SW8270C	10/1/2008	0.33	1	0.330	ND	mg/Kg	R17469
Hexachloroethane	SW8270C	10/1/2008	0.33	1	0.330	ND	mg/Kg	R17469
Indeno(1,2,3-cd)pyrene	SW8270C	10/1/2008	0.33	1	0.330	ND	mg/Kg	R17469
Isophorone	SW8270C	10/1/2008	0.33	1	0.330	ND	mg/Kg	R17469
Naphthalene	SW8270C	10/1/2008	0.33	1	0.330	ND	mg/Kg	R17469
Nitrobenzene	SW8270C	10/1/2008	0.33	1	0.330	ND	mg/Kg	R17469
N-Nitrosodimethylamine	SW8270C	10/1/2008	0.33	1	0.330	ND	mg/Kg	R17469
N-Nitrosodi-n-propylamine	SW8270C	10/1/2008	0.33	1	0.330	ND	mg/Kg	R17469
N-Nitrosodiphenylamine	SW8270C	10/1/2008	0.33	1	0.330	ND	mg/Kg	R17469
Pentachlorophenol	SW8270C	10/1/2008	0.33	1	0.330	ND	mg/Kg	R17469
Phenanthrene	SW8270C	10/1/2008	0.33	1	0.330	ND	mg/Kg	R17469
Phenol	SW8270C	10/1/2008	0.33	1	0.330	ND	mg/Kg	R17469
Pyrene	SW8270C	10/1/2008	0.33	1	0.330	ND	mg/Kg	R17469
Surr: 2,4,6-Tribromophenol	SW8270C	10/1/2008	0	1	16.5-114	37.2	%REC	R17469
Surr: 2-Fluorobiphenyl	SW8270C	10/1/2008	0	1	24.1-85.6	38.1	%REC	R17469
Surr: 2-Fluorophenol	SW8270C	10/1/2008	0	1	30.3-76.6	52.7	%REC	R17469
Surr: Nitrobenzene-d5	SW8270C	10/1/2008	0	1	29.4-78.2	54.4	%REC	R17469
Surr: Phenol-d6	SW8270C	10/1/2008	0	1	28.7-84.7	42.8	%REC	R17469
Surr: p-Terphenyl-d14	SW8270C	10/1/2008	0	1	37.9-127	81.6	%REC	R17469

These analyses were performed according to State of California Environmental Laboratory Accreditation program, Certificate # 1991

Report prepared for: Charlie Almestad
KLEINFELDER

Date Received: 9/25/2008
Date Reported: 10/3/2008

Client Sample ID: T-A-2-2
Sample Location: CTO
Sample Matrix: SOIL
Date/Time Sampled 9/23/2008 11:30:00 AM

Lab Sample ID: 0809187-012
Date Prepared: 9/29/2008

Parameters	Analysis Method	Date Analyzed	RL	Dilution Factor	MRL	Result	Units	Analytical Batch
4,4´-DDD	SW8081A	9/30/2008	2	1	2.00	ND	µg/Kg	R17484
4,4´-DDE	SW8081A	9/30/2008	2	1	2.00	ND	µg/Kg	R17484
4,4´-DDT	SW8081A	9/30/2008	2	1	2.00	ND	µg/Kg	R17484
Aldrin	SW8081A	9/30/2008	2	1	2.00	ND	µg/Kg	R17484
alpha-BHC	SW8081A	9/30/2008	2	1	2.00	ND	µg/Kg	R17484
alpha-Chlordane	SW8081A	9/30/2008	2	1	2.00	ND	µg/Kg	R17484
beta-BHC	SW8081A	9/30/2008	2	1	2.00	ND	µg/Kg	R17484
Chlordane	SW8081A	9/30/2008	20	1	20.0	ND	µg/Kg	R17484
delta-BHC	SW8081A	9/30/2008	2	1	2.00	ND	µg/Kg	R17484
Dieldrin	SW8081A	9/30/2008	2	1	2.00	ND	µg/Kg	R17484
Endosulfan I	SW8081A	9/30/2008	2	1	2.00	ND	µg/Kg	R17484
Endosulfan II	SW8081A	9/30/2008	2	1	2.00	ND	µg/Kg	R17484
Endosulfan sulfate	SW8081A	9/30/2008	2	1	2.00	ND	µg/Kg	R17484
Endrin	SW8081A	9/30/2008	2	1	2.00	ND	µg/Kg	R17484
Endrin aldehyde	SW8081A	9/30/2008	2	1	2.00	ND	µg/Kg	R17484
Endrin ketone	SW8081A	9/30/2008	2	1	2.00	ND	µg/Kg	R17484
gamma-BHC	SW8081A	9/30/2008	2	1	2.00	ND	µg/Kg	R17484
gamma-Chlordane	SW8081A	9/30/2008	2	1	2.00	ND	µg/Kg	R17484
Heptachlor	SW8081A	9/30/2008	2	1	2.00	ND	µg/Kg	R17484
Heptachlor epoxide	SW8081A	9/30/2008	2	1	2.00	ND	µg/Kg	R17484
Methoxychlor	SW8081A	9/30/2008	5	1	5.00	ND	µg/Kg	R17484
Toxaphene	SW8081A	9/30/2008	100	1	100	ND	µg/Kg	R17484
Surr: Decachlorobiphenyl	SW8081A	9/30/2008	0	1	54.6-127	103	%REC	R17484
Surr: Tetrachloro-m-xylene	SW8081A	9/30/2008	0	1	54-122	97.3	%REC	R17484
Aroclor 1016	SW8082	9/30/2008	0.1	1	0.100	ND	mg/Kg	R17478
Aroclor 1221	SW8082	9/30/2008	0.2	1	0.200	ND	mg/Kg	R17478
Aroclor 1232	SW8082	9/30/2008	0.1	1	0.100	ND	mg/Kg	R17478
Aroclor 1242	SW8082	9/30/2008	0.1	1	0.100	ND	mg/Kg	R17478
Aroclor 1248	SW8082	9/30/2008	0.1	1	0.100	ND	mg/Kg	R17478
Aroclor 1254	SW8082	9/30/2008	0.1	1	0.100	ND	mg/Kg	R17478
Aroclor 1260	SW8082	9/30/2008	0.1	1	0.100	ND	mg/Kg	R17478
Surr: Decachlorobiphenyl	SW8082	9/30/2008	0	1	63.7-126	94.4	%REC	R17478
Surr: Tetrachloro-m-xylene	SW8082	9/30/2008	0	1	51.7-128	100	%REC	R17478

These analyses were performed according to State of California Environmental Laboratory Accreditation program, Certificate # 1991

Report prepared for: Charlie Almestad
KLEINFELDER

Date Received: 9/25/2008
Date Reported: 10/3/2008

Client Sample ID: T-C-2-4
Sample Location: CTO
Sample Matrix: SOIL
Date/Time Sampled 9/23/2008 1:05:00 PM

Lab Sample ID: 0809187-017
Date Prepared: 9/29/2008

Parameters	Analysis Method	Date Analyzed	RL	Dilution Factor	MRL	Result	Units	Analytical Batch
4,4´-DDD	SW8081A	9/30/2008	2	1	2.00	ND	µg/Kg	R17484
4,4´-DDE	SW8081A	9/30/2008	2	1	2.00	ND	µg/Kg	R17484
4,4´-DDT	SW8081A	9/30/2008	2	1	2.00	ND	µg/Kg	R17484
Aldrin	SW8081A	9/30/2008	2	1	2.00	ND	µg/Kg	R17484
alpha-BHC	SW8081A	9/30/2008	2	1	2.00	ND	µg/Kg	R17484
alpha-Chlordane	SW8081A	9/30/2008	2	1	2.00	ND	µg/Kg	R17484
beta-BHC	SW8081A	9/30/2008	2	1	2.00	ND	µg/Kg	R17484
Chlordane	SW8081A	9/30/2008	20	1	20.0	ND	µg/Kg	R17484
delta-BHC	SW8081A	9/30/2008	2	1	2.00	ND	µg/Kg	R17484
Dieldrin	SW8081A	9/30/2008	2	1	2.00	ND	µg/Kg	R17484
Endosulfan I	SW8081A	9/30/2008	2	1	2.00	ND	µg/Kg	R17484
Endosulfan II	SW8081A	9/30/2008	2	1	2.00	ND	µg/Kg	R17484
Endosulfan sulfate	SW8081A	9/30/2008	2	1	2.00	ND	µg/Kg	R17484
Endrin	SW8081A	9/30/2008	2	1	2.00	ND	µg/Kg	R17484
Endrin aldehyde	SW8081A	9/30/2008	2	1	2.00	ND	µg/Kg	R17484
Endrin ketone	SW8081A	9/30/2008	2	1	2.00	ND	µg/Kg	R17484
gamma-BHC	SW8081A	9/30/2008	2	1	2.00	ND	µg/Kg	R17484
gamma-Chlordane	SW8081A	9/30/2008	2	1	2.00	ND	µg/Kg	R17484
Heptachlor	SW8081A	9/30/2008	2	1	2.00	ND	µg/Kg	R17484
Heptachlor epoxide	SW8081A	9/30/2008	2	1	2.00	ND	µg/Kg	R17484
Methoxychlor	SW8081A	9/30/2008	5	1	5.00	ND	µg/Kg	R17484
Toxaphene	SW8081A	9/30/2008	100	1	100	ND	µg/Kg	R17484
Surr: Decachlorobiphenyl	SW8081A	9/30/2008	0	1	54.6-127	110	%REC	R17484
Surr: Tetrachloro-m-xylene	SW8081A	9/30/2008	0	1	54-122	100	%REC	R17484
Aroclor 1016	SW8082	9/30/2008	0.1	1	0.100	ND	mg/Kg	R17478
Aroclor 1221	SW8082	9/30/2008	0.2	1	0.200	ND	mg/Kg	R17478
Aroclor 1232	SW8082	9/30/2008	0.1	1	0.100	ND	mg/Kg	R17478
Aroclor 1242	SW8082	9/30/2008	0.1	1	0.100	ND	mg/Kg	R17478
Aroclor 1248	SW8082	9/30/2008	0.1	1	0.100	ND	mg/Kg	R17478
Aroclor 1254	SW8082	9/30/2008	0.1	1	0.100	ND	mg/Kg	R17478
Aroclor 1260	SW8082	9/30/2008	0.1	1	0.100	ND	mg/Kg	R17478
Surr: Decachlorobiphenyl	SW8082	9/30/2008	0	1	63.7-126	97.5	%REC	R17478
Surr: Tetrachloro-m-xylene	SW8082	9/30/2008	0	1	51.7-128	104	%REC	R17478

These analyses were performed according to State of California Environmental Laboratory Accreditation program, Certificate # 1991

Report prepared for: Charlie Almestad
KLEINFELDER

Date Received: 9/25/2008
Date Reported: 10/3/2008

Client Sample ID: T-B-2-3
Sample Location: CTO
Sample Matrix: SOIL
Date/Time Sampled 9/23/2008 8:00:00 AM

Lab Sample ID: 0809187-022
Date Prepared: 9/29/2008

Parameters	Analysis Method	Date Analyzed	RL	Dilution Factor	MRL	Result	Units	Analytical Batch
4,4´-DDD	SW8081A	9/30/2008	2	1	2.00	ND	µg/Kg	R17484
4,4´-DDE	SW8081A	9/30/2008	2	1	2.00	ND	µg/Kg	R17484
4,4´-DDT	SW8081A	9/30/2008	2	1	2.00	ND	µg/Kg	R17484
Aldrin	SW8081A	9/30/2008	2	1	2.00	ND	µg/Kg	R17484
alpha-BHC	SW8081A	9/30/2008	2	1	2.00	ND	µg/Kg	R17484
alpha-Chlordane	SW8081A	9/30/2008	2	1	2.00	ND	µg/Kg	R17484
beta-BHC	SW8081A	9/30/2008	2	1	2.00	ND	µg/Kg	R17484
Chlordane	SW8081A	9/30/2008	20	1	20.0	ND	µg/Kg	R17484
delta-BHC	SW8081A	9/30/2008	2	1	2.00	ND	µg/Kg	R17484
Dieldrin	SW8081A	9/30/2008	2	1	2.00	ND	µg/Kg	R17484
Endosulfan I	SW8081A	9/30/2008	2	1	2.00	ND	µg/Kg	R17484
Endosulfan II	SW8081A	9/30/2008	2	1	2.00	ND	µg/Kg	R17484
Endosulfan sulfate	SW8081A	9/30/2008	2	1	2.00	ND	µg/Kg	R17484
Endrin	SW8081A	9/30/2008	2	1	2.00	ND	µg/Kg	R17484
Endrin aldehyde	SW8081A	9/30/2008	2	1	2.00	ND	µg/Kg	R17484
Endrin ketone	SW8081A	9/30/2008	2	1	2.00	ND	µg/Kg	R17484
gamma-BHC	SW8081A	9/30/2008	2	1	2.00	ND	µg/Kg	R17484
gamma-Chlordane	SW8081A	9/30/2008	2	1	2.00	ND	µg/Kg	R17484
Heptachlor	SW8081A	9/30/2008	2	1	2.00	ND	µg/Kg	R17484
Heptachlor epoxide	SW8081A	9/30/2008	2	1	2.00	ND	µg/Kg	R17484
Methoxychlor	SW8081A	9/30/2008	5	1	5.00	ND	µg/Kg	R17484
Toxaphene	SW8081A	9/30/2008	100	1	100	ND	µg/Kg	R17484
Surr: Decachlorobiphenyl	SW8081A	9/30/2008	0	1	54.6-127	108	%REC	R17484
Surr: Tetrachloro-m-xylene	SW8081A	9/30/2008	0	1	54-122	101	%REC	R17484
Aroclor 1016	SW8082	9/30/2008	0.1	1	0.100	ND	mg/Kg	R17478
Aroclor 1221	SW8082	9/30/2008	0.2	1	0.200	ND	mg/Kg	R17478
Aroclor 1232	SW8082	9/30/2008	0.1	1	0.100	ND	mg/Kg	R17478
Aroclor 1242	SW8082	9/30/2008	0.1	1	0.100	ND	mg/Kg	R17478
Aroclor 1248	SW8082	9/30/2008	0.1	1	0.100	ND	mg/Kg	R17478
Aroclor 1254	SW8082	9/30/2008	0.1	1	0.100	ND	mg/Kg	R17478
Aroclor 1260	SW8082	9/30/2008	0.1	1	0.100	ND	mg/Kg	R17478
Surr: Decachlorobiphenyl	SW8082	9/30/2008	0	1	63.7-126	93.4	%REC	R17478
Surr: Tetrachloro-m-xylene	SW8082	9/30/2008	0	1	51.7-128	101	%REC	R17478

These analyses were performed according to State of California Environmental Laboratory Accreditation program, Certificate # 1991

Report prepared for: Charlie Almestad
KLEINFELDER

Date Received: 9/25/2008
Date Reported: 10/3/2008

Client Sample ID: T-D3-2-4
Sample Location: CTO
Sample Matrix: SOIL
Date/Time Sampled 9/23/2008 10:25:00 AM

Lab Sample ID: 0809187-027
Date Prepared: 9/29/2008

Parameters	Analysis Method	Date Analyzed	RL	Dilution Factor	MRL	Result	Units	Analytical Batch
4,4´-DDD	SW8081A	9/30/2008	2	1	2.00	ND	µg/Kg	R17484
4,4´-DDE	SW8081A	9/30/2008	2	1	2.00	ND	µg/Kg	R17484
4,4´-DDT	SW8081A	9/30/2008	2	1	2.00	3.75	µg/Kg	R17484
Aldrin	SW8081A	9/30/2008	2	1	2.00	ND	µg/Kg	R17484
alpha-BHC	SW8081A	9/30/2008	2	1	2.00	ND	µg/Kg	R17484
alpha-Chlordane	SW8081A	9/30/2008	2	1	2.00	ND	µg/Kg	R17484
beta-BHC	SW8081A	9/30/2008	2	1	2.00	ND	µg/Kg	R17484
Chlordane	SW8081A	9/30/2008	20	1	20.0	ND	µg/Kg	R17484
delta-BHC	SW8081A	9/30/2008	2	1	2.00	ND	µg/Kg	R17484
Dieldrin	SW8081A	9/30/2008	2	1	2.00	ND	µg/Kg	R17484
Endosulfan I	SW8081A	9/30/2008	2	1	2.00	ND	µg/Kg	R17484
Endosulfan II	SW8081A	9/30/2008	2	1	2.00	ND	µg/Kg	R17484
Endosulfan sulfate	SW8081A	9/30/2008	2	1	2.00	ND	µg/Kg	R17484
Endrin	SW8081A	9/30/2008	2	1	2.00	ND	µg/Kg	R17484
Endrin aldehyde	SW8081A	9/30/2008	2	1	2.00	ND	µg/Kg	R17484
Endrin ketone	SW8081A	9/30/2008	2	1	2.00	ND	µg/Kg	R17484
gamma-BHC	SW8081A	9/30/2008	2	1	2.00	ND	µg/Kg	R17484
gamma-Chlordane	SW8081A	9/30/2008	2	1	2.00	ND	µg/Kg	R17484
Heptachlor	SW8081A	9/30/2008	2	1	2.00	ND	µg/Kg	R17484
Heptachlor epoxide	SW8081A	9/30/2008	2	1	2.00	ND	µg/Kg	R17484
Methoxychlor	SW8081A	9/30/2008	5	1	5.00	ND	µg/Kg	R17484
Toxaphene	SW8081A	9/30/2008	100	1	100	ND	µg/Kg	R17484
Surr: Decachlorobiphenyl	SW8081A	9/30/2008	0	1	54.6-127	107	%REC	R17484
Surr: Tetrachloro-m-xylene	SW8081A	9/30/2008	0	1	54-122	101	%REC	R17484
Aroclor 1016	SW8082	9/30/2008	0.1	1	0.100	ND	mg/Kg	R17478
Aroclor 1221	SW8082	9/30/2008	0.2	1	0.200	ND	mg/Kg	R17478
Aroclor 1232	SW8082	9/30/2008	0.1	1	0.100	ND	mg/Kg	R17478
Aroclor 1242	SW8082	9/30/2008	0.1	1	0.100	ND	mg/Kg	R17478
Aroclor 1248	SW8082	9/30/2008	0.1	1	0.100	ND	mg/Kg	R17478
Aroclor 1254	SW8082	9/30/2008	0.1	1	0.100	ND	mg/Kg	R17478
Aroclor 1260	SW8082	9/30/2008	0.1	1	0.100	ND	mg/Kg	R17478
Surr: Decachlorobiphenyl	SW8082	9/30/2008	0	1	63.7-126	91.7	%REC	R17478
Surr: Tetrachloro-m-xylene	SW8082	9/30/2008	0	1	51.7-128	95.2	%REC	R17478

These analyses were performed according to State of California Environmental Laboratory Accreditation program, Certificate # 1991

Report prepared for: Charlie Almestad
KLEINFELDER

Date Received: 9/25/2008
Date Reported: 10/3/2008

Client Sample ID: CompT-E1(1A-1D)
Sample Location: CTO
Sample Matrix: SOIL
Date/Time Sampled 9/23/2008

Lab Sample ID: 0809187-028
Date Prepared: 9/29/2008

Parameters	Analysis Method	Date Analyzed	RL	Dilution Factor	MRL	Result	Units	Analytical Batch
Antimony	SW6010B	9/29/2008	5	1	5.0	ND	mg/Kg	4626
Arsenic	SW6010B	9/29/2008	1.7	1	1.7	ND	mg/Kg	4626
Barium	SW6010B	9/29/2008	5	1	5.0	48	mg/Kg	4626
Beryllium	SW6010B	9/29/2008	2	1	2.0	ND	mg/Kg	4626
Cadmium	SW6010B	9/29/2008	1	1	1.0	ND	mg/Kg	4626
Chromium	SW6010B	9/29/2008	5	1	5.0	33	mg/Kg	4626
Cobalt	SW6010B	9/29/2008	5	1	5.0	ND	mg/Kg	4626
Copper	SW6010B	9/29/2008	5	1	5.0	5.6	mg/Kg	4626
Lead	SW6010B	9/29/2008	1	1	1.0	2.6	mg/Kg	4626
Molybdenum	SW6010B	9/29/2008	5	1	5.0	ND	mg/Kg	4626
Nickel	SW6010B	9/29/2008	5	1	5.0	25	mg/Kg	4626
Selenium	SW6010B	9/29/2008	5	1	5.0	ND	mg/Kg	4626
Silver	SW6010B	9/29/2008	1	1	1.0	ND	mg/Kg	4626
Thallium	SW6010B	9/29/2008	5	1	5.0	ND	mg/Kg	4626
Vanadium	SW6010B	9/29/2008	5	1	5.0	25	mg/Kg	4626
Zinc	SW6010B	9/29/2008	5	1	5.0	16	mg/Kg	4626
Mercury	SW7471A	9/30/2008	0.1	1	0.10	ND	mg/Kg	4632
TPH (Diesel)	SW8015B	9/30/2008	2	1	2.00	ND	mg/Kg	R17488
Surr: Pentacosane	SW8015B	9/30/2008	0	1	59.7-129	76.1	%REC	R17488
TPH (Gasoline)	SW8015B	10/3/2008	0.1	1	0.100	ND	mg/Kg	G17507
Surr: Trifluorotoluene	SW8015B	10/3/2008	0	1	65-135	91.0	%REC	G17507

These analyses were performed according to State of California Environmental Laboratory Accreditation program, Certificate # 1991

Report prepared for: Charlie Almestad
KLEINFELDER

Date Received: 9/25/2008
Date Reported: 10/3/2008

Client Sample ID: CompT-E1(1A-1D)
Sample Location: CTO
Sample Matrix: SOIL
Date/Time Sampled 9/23/2008

Lab Sample ID: 0809187-028
Date Prepared: 9/29/2008

Parameters	Analysis Method	Date Analyzed	RL	Dilution Factor	MRL	Result	Units	Analytical Batch
1,1,1,2-Tetrachloroethane	SW8260B	9/30/2008	10	1	10	ND	µg/Kg	R17471
1,1,1-Trichloroethane	SW8260B	9/30/2008	10	1	10	ND	µg/Kg	R17471
1,1,2,2-Tetrachloroethane	SW8260B	9/30/2008	10	1	10	ND	µg/Kg	R17471
1,1,2-Trichloroethane	SW8260B	9/30/2008	10	1	10	ND	µg/Kg	R17471
1,1-Dichloroethane	SW8260B	9/30/2008	10	1	10	ND	µg/Kg	R17471
1,1-Dichloroethene	SW8260B	9/30/2008	10	1	10	ND	µg/Kg	R17471
1,1-Dichloropropene	SW8260B	9/30/2008	10	1	10	ND	µg/Kg	R17471
1,2,3-Trichlorobenzene	SW8260B	9/30/2008	10	1	10	ND	µg/Kg	R17471
1,2,3-Trichloropropane	SW8260B	9/30/2008	10	1	10	ND	µg/Kg	R17471
1,2,4-Trichlorobenzene	SW8260B	9/30/2008	10	1	10	ND	µg/Kg	R17471
1,2,4-Trimethylbenzene	SW8260B	9/30/2008	10	1	10	ND	µg/Kg	R17471
1,2-Dibromo-3-chloropropane	SW8260B	9/30/2008	10	1	10	ND	µg/Kg	R17471
1,2-Dibromoethane (EDB)	SW8260B	9/30/2008	10	1	10	ND	µg/Kg	R17471
1,2-Dichlorobenzene	SW8260B	9/30/2008	10	1	10	ND	µg/Kg	R17471
1,2-Dichloroethane (EDC)	SW8260B	9/30/2008	10	1	10	ND	µg/Kg	R17471
1,2-Dichloropropane	SW8260B	9/30/2008	10	1	10	ND	µg/Kg	R17471
1,3,5-Trimethylbenzene	SW8260B	9/30/2008	10	1	10	ND	µg/Kg	R17471
1,3-Dichlorobenzene	SW8260B	9/30/2008	10	1	10	ND	µg/Kg	R17471
1,4-Dichlorobenzene	SW8260B	9/30/2008	10	1	10	ND	µg/Kg	R17471
2,2-Dichloropropane	SW8260B	9/30/2008	10	1	10	ND	µg/Kg	R17471
2-Chloroethyl vinyl ether	SW8260B	9/30/2008	10	1	10	ND	µg/Kg	R17471
2-Chlorotoluene	SW8260B	9/30/2008	10	1	10	ND	µg/Kg	R17471
4-Chlorotoluene	SW8260B	9/30/2008	10	1	10	ND	µg/Kg	R17471
4-Isopropyltoluene	SW8260B	9/30/2008	10	1	10	ND	µg/Kg	R17471
Benzene	SW8260B	9/30/2008	10	1	10	ND	µg/Kg	R17471
Bromobenzene	SW8260B	9/30/2008	10	1	10	ND	µg/Kg	R17471
Bromochloromethane	SW8260B	9/30/2008	10	1	10	ND	µg/Kg	R17471
Bromodichloromethane	SW8260B	9/30/2008	10	1	10	ND	µg/Kg	R17471
Bromoform	SW8260B	9/30/2008	10	1	10	ND	µg/Kg	R17471
Bromomethane	SW8260B	9/30/2008	10	1	10	ND	µg/Kg	R17471
Carbon tetrachloride	SW8260B	9/30/2008	10	1	10	ND	µg/Kg	R17471
Chlorobenzene	SW8260B	9/30/2008	10	1	10	ND	µg/Kg	R17471
Chloroform	SW8260B	9/30/2008	10	1	10	ND	µg/Kg	R17471
Chloromethane	SW8260B	9/30/2008	10	1	10	ND	µg/Kg	R17471
cis-1,2-Dichloroethene	SW8260B	9/30/2008	10	1	10	ND	µg/Kg	R17471
cis-1,3-Dichloropropene	SW8260B	9/30/2008	10	1	10	ND	µg/Kg	R17471
Dibromochloromethane	SW8260B	9/30/2008	10	1	10	ND	µg/Kg	R17471
Dibromomethane	SW8260B	9/30/2008	10	1	10	ND	µg/Kg	R17471
Dichlorodifluoromethane	SW8260B	9/30/2008	10	1	10	ND	µg/Kg	R17471
Ethyl tert-butyl ether (ETBE)	SW8260B	9/30/2008	10	1	10	ND	µg/Kg	R17471
Ethylbenzene	SW8260B	9/30/2008	10	1	10	ND	µg/Kg	R17471
Freon-113	SW8260B	9/30/2008	10	1	10	ND	µg/Kg	R17471
Hexachlorobutadiene	SW8260B	9/30/2008	10	1	10	ND	µg/Kg	R17471

These analyses were performed according to State of California Environmental Laboratory Accreditation program, Certificate # 1991

Report prepared for: Charlie Almestad
KLEINFELDER

Date Received: 9/25/2008
Date Reported: 10/3/2008

Client Sample ID: CompT-E1(1A-1D)
Sample Location: CTO
Sample Matrix: SOIL
Date/Time Sampled 9/23/2008

Lab Sample ID: 0809187-028
Date Prepared: 9/29/2008

Parameters	Analysis Method	Date Analyzed	RL	Dilution Factor	MRL	Result	Units	Analytical Batch
Isopropyl Ether	SW8260B	9/30/2008	10	1	10	ND	µg/Kg	R17471
Isopropylbenzene	SW8260B	9/30/2008	10	1	10	ND	µg/Kg	R17471
Methyl tert-butyl ether (MTBE)	SW8260B	9/30/2008	10	1	10	ND	µg/Kg	R17471
Methylene chloride	SW8260B	9/30/2008	50	1	50	ND	µg/Kg	R17471
Naphthalene	SW8260B	9/30/2008	20	1	20	ND	µg/Kg	R17471
n-Butylbenzene	SW8260B	9/30/2008	10	1	10	ND	µg/Kg	R17471
n-Propylbenzene	SW8260B	9/30/2008	10	1	10	ND	µg/Kg	R17471
sec-Butylbenzene	SW8260B	9/30/2008	10	1	10	ND	µg/Kg	R17471
Styrene	SW8260B	9/30/2008	10	1	10	ND	µg/Kg	R17471
t-Butyl alcohol (t-Butanol)	SW8260B	9/30/2008	50	1	50	ND	µg/Kg	R17471
tert-Amyl methyl ether (TAME)	SW8260B	9/30/2008	10	1	10	ND	µg/Kg	R17471
tert-Butylbenzene	SW8260B	9/30/2008	10	1	10	ND	µg/Kg	R17471
Tetrachloroethene	SW8260B	9/30/2008	10	1	10	ND	µg/Kg	R17471
Toluene	SW8260B	9/30/2008	10	1	10	ND	µg/Kg	R17471
trans-1,2-Dichloroethene	SW8260B	9/30/2008	10	1	10	ND	µg/Kg	R17471
trans-1,3-Dichloropropene	SW8260B	9/30/2008	10	1	10	ND	µg/Kg	R17471
Trichloroethene	SW8260B	9/30/2008	10	1	10	ND	µg/Kg	R17471
Trichlorofluoromethane	SW8260B	9/30/2008	10	1	10	ND	µg/Kg	R17471
Vinyl chloride	SW8260B	9/30/2008	10	1	10	ND	µg/Kg	R17471
Xylenes, Total	SW8260B	9/30/2008	15	1	15	ND	µg/Kg	R17471
Surr: 4-Bromofluorobenzene	SW8260B	9/30/2008	0	1	55.8-141	78.8	%REC	R17471
Surr: Dibromofluoromethane	SW8260B	9/30/2008	0	1	59.8-148	126	%REC	R17471
Surr: Toluene-d8	SW8260B	9/30/2008	0	1	55.2-133	87.9	%REC	R17471

These analyses were performed according to State of California Environmental Laboratory Accreditation program, Certificate # 1991

Report prepared for: Charlie Almestad
KLEINFELDER

Date Received: 9/25/2008
Date Reported: 10/3/2008

Client Sample ID: CompT-E1(1A-1D)
Sample Location: CTO
Sample Matrix: SOIL
Date/Time Sampled 9/23/2008

Lab Sample ID: 0809187-028
Date Prepared: 9/29/2008

Parameters	Analysis Method	Date Analyzed	RL	Dilution Factor	MRL	Result	Units	Analytical Batch
1,2,4-Trichlorobenzene	SW8270C	10/1/2008	0.33	1	0.330	ND	mg/Kg	R17469
1,2-Dichlorobenzene	SW8270C	10/1/2008	0.33	1	0.330	ND	mg/Kg	R17469
1,3-Dichlorobenzene	SW8270C	10/1/2008	0.33	1	0.330	ND	mg/Kg	R17469
1,4-Dichlorobenzene	SW8270C	10/1/2008	0.33	1	0.330	ND	mg/Kg	R17469
2,4,5-Trichlorophenol	SW8270C	10/1/2008	0.33	1	0.330	ND	mg/Kg	R17469
2,4,6-Trichlorophenol	SW8270C	10/1/2008	0.33	1	0.330	ND	mg/Kg	R17469
2,4-Dichlorophenol	SW8270C	10/1/2008	0.33	1	0.330	ND	mg/Kg	R17469
2,4-Dimethylphenol	SW8270C	10/1/2008	0.66	1	0.660	ND	mg/Kg	R17469
2,4-Dinitrophenol	SW8270C	10/1/2008	1.7	1	1.70	ND	mg/Kg	R17469
2,4-Dinitrotoluene	SW8270C	10/1/2008	0.33	1	0.330	ND	mg/Kg	R17469
2,6-Dinitrotoluene	SW8270C	10/1/2008	0.33	1	0.330	ND	mg/Kg	R17469
2-Chloronaphthalene	SW8270C	10/1/2008	0.33	1	0.330	ND	mg/Kg	R17469
2-Chlorophenol	SW8270C	10/1/2008	0.33	1	0.330	ND	mg/Kg	R17469
2-Methylnaphthalene	SW8270C	10/1/2008	0.33	1	0.330	ND	mg/Kg	R17469
2-Methylphenol	SW8270C	10/1/2008	0.33	1	0.330	ND	mg/Kg	R17469
2-Nitroaniline	SW8270C	10/1/2008	0.33	1	0.330	ND	mg/Kg	R17469
2-Nitrophenol	SW8270C	10/1/2008	0.66	1	0.660	ND	mg/Kg	R17469
3,3´-Dichlorobenzidine	SW8270C	10/1/2008	1.7	1	1.70	ND	mg/Kg	R17469
3-Methylphenol	SW8270C	10/1/2008	0.33	1	0.330	ND	mg/Kg	R17469
3-Nitroaniline	SW8270C	10/1/2008	0.33	1	0.330	ND	mg/Kg	R17469
4,6-Dinitro-2-methylphenol	SW8270C	10/1/2008	0.33	1	0.330	ND	mg/Kg	R17469
4-Bromophenyl phenyl ether	SW8270C	10/1/2008	0.33	1	0.330	ND	mg/Kg	R17469
4-Chloro-3-methylphenol	SW8270C	10/1/2008	0.33	1	0.330	ND	mg/Kg	R17469
4-Chloroaniline	SW8270C	10/1/2008	0.33	1	0.330	ND	mg/Kg	R17469
4-Chlorophenyl phenyl ether	SW8270C	10/1/2008	0.33	1	0.330	ND	mg/Kg	R17469
4-Methylphenol	SW8270C	10/1/2008	0.33	1	0.330	ND	mg/Kg	R17469
4-Nitroaniline	SW8270C	10/1/2008	0.33	1	0.330	ND	mg/Kg	R17469
4-Nitrophenol	SW8270C	10/1/2008	0.33	1	0.330	ND	mg/Kg	R17469
Acenaphthene	SW8270C	10/1/2008	0.33	1	0.330	ND	mg/Kg	R17469
Acenaphthylene	SW8270C	10/1/2008	0.33	1	0.330	ND	mg/Kg	R17469
Aniline	SW8270C	10/1/2008	0.33	1	0.330	ND	mg/Kg	R17469
Anthracene	SW8270C	10/1/2008	0.33	1	0.330	ND	mg/Kg	R17469
Benz(a)anthracene	SW8270C	10/1/2008	0.33	1	0.330	ND	mg/Kg	R17469
Benzidine	SW8270C	10/1/2008	3.3	1	3.30	ND	mg/Kg	R17469
Benzo(g,h,i)perylene	SW8270C	10/1/2008	0.33	1	0.330	ND	mg/Kg	R17469
Benzo[a]pyrene	SW8270C	10/1/2008	0.33	1	0.330	ND	mg/Kg	R17469
Benzo[b]fluoranthene	SW8270C	10/1/2008	0.33	1	0.330	ND	mg/Kg	R17469
Benzo[k]fluoranthene	SW8270C	10/1/2008	0.33	1	0.330	ND	mg/Kg	R17469
Benzoic acid	SW8270C	10/1/2008	6.66	1	6.66	ND	mg/Kg	R17469
Benzyl alcohol	SW8270C	10/1/2008	6.66	1	6.66	ND	mg/Kg	R17469
Bis(2-chloroethoxy)methane	SW8270C	10/1/2008	0.33	1	0.330	ND	mg/Kg	R17469
Bis(2-chloroethyl)ether	SW8270C	10/1/2008	0.33	1	0.330	ND	mg/Kg	R17469
Bis(2-chloroisopropyl)ether	SW8270C	10/1/2008	0.33	1	0.330	ND	mg/Kg	R17469

These analyses were performed according to State of California Environmental Laboratory Accreditation program, Certificate # 1991

Report prepared for: Charlie Almestad
KLEINFELDER

Date Received: 9/25/2008
Date Reported: 10/3/2008

Client Sample ID: CompT-E1(1A-1D)
Sample Location: CTO
Sample Matrix: SOIL
Date/Time Sampled 9/23/2008

Lab Sample ID: 0809187-028
Date Prepared: 9/29/2008

Parameters	Analysis Method	Date Analyzed	RL	Dilution Factor	MRL	Result	Units	Analytical Batch
Bis(2-ethylhexyl)phthalate	SW8270C	10/1/2008	3.3	1	3.30	ND	mg/Kg	R17469
Butyl benzyl phthalate	SW8270C	10/1/2008	0.33	1	0.330	ND	mg/Kg	R17469
Chrysene	SW8270C	10/1/2008	0.66	1	0.660	ND	mg/Kg	R17469
Dibenz(a,h)anthracene	SW8270C	10/1/2008	0.33	1	0.330	ND	mg/Kg	R17469
Dibenzofuran	SW8270C	10/1/2008	0.33	1	0.330	ND	mg/Kg	R17469
Diethyl phthalate	SW8270C	10/1/2008	3.3	1	3.30	ND	mg/Kg	R17469
Dimethyl phthalate	SW8270C	10/1/2008	3.3	1	3.30	ND	mg/Kg	R17469
Di-n-butyl phthalate	SW8270C	10/1/2008	3.3	1	3.30	ND	mg/Kg	R17469
Di-n-octyl phthalate	SW8270C	10/1/2008	0.33	1	0.330	ND	mg/Kg	R17469
Fluoranthene	SW8270C	10/1/2008	0.33	1	0.330	ND	mg/Kg	R17469
Fluorene	SW8270C	10/1/2008	0.33	1	0.330	ND	mg/Kg	R17469
Hexachlorobenzene	SW8270C	10/1/2008	0.33	1	0.330	ND	mg/Kg	R17469
Hexachlorobutadiene	SW8270C	10/1/2008	0.33	1	0.330	ND	mg/Kg	R17469
Hexachlorocyclopentadiene	SW8270C	10/1/2008	0.33	1	0.330	ND	mg/Kg	R17469
Hexachloroethane	SW8270C	10/1/2008	0.33	1	0.330	ND	mg/Kg	R17469
Indeno(1,2,3-cd)pyrene	SW8270C	10/1/2008	0.33	1	0.330	ND	mg/Kg	R17469
Isophorone	SW8270C	10/1/2008	0.33	1	0.330	ND	mg/Kg	R17469
Naphthalene	SW8270C	10/1/2008	0.33	1	0.330	ND	mg/Kg	R17469
Nitrobenzene	SW8270C	10/1/2008	0.33	1	0.330	ND	mg/Kg	R17469
N-Nitrosodimethylamine	SW8270C	10/1/2008	0.33	1	0.330	ND	mg/Kg	R17469
N-Nitrosodi-n-propylamine	SW8270C	10/1/2008	0.33	1	0.330	ND	mg/Kg	R17469
N-Nitrosodiphenylamine	SW8270C	10/1/2008	0.33	1	0.330	ND	mg/Kg	R17469
Pentachlorophenol	SW8270C	10/1/2008	0.33	1	0.330	ND	mg/Kg	R17469
Phenanthrene	SW8270C	10/1/2008	0.33	1	0.330	ND	mg/Kg	R17469
Phenol	SW8270C	10/1/2008	0.33	1	0.330	ND	mg/Kg	R17469
Pyrene	SW8270C	10/1/2008	0.33	1	0.330	ND	mg/Kg	R17469
Surr: 2,4,6-Tribromophenol	SW8270C	10/1/2008	0	1	16.5-114	42.9	%REC	R17469
Surr: 2-Fluorobiphenyl	SW8270C	10/1/2008	0	1	24.1-85.6	38.2	%REC	R17469
Surr: 2-Fluorophenol	SW8270C	10/1/2008	0	1	30.3-76.6	49.3	%REC	R17469
Surr: Nitrobenzene-d5	SW8270C	10/1/2008	0	1	29.4-78.2	53.8	%REC	R17469
Surr: Phenol-d6	SW8270C	10/1/2008	0	1	28.7-84.7	42.4	%REC	R17469
Surr: p-Terphenyl-d14	SW8270C	10/1/2008	0	1	37.9-127	79.4	%REC	R17469

These analyses were performed according to State of California Environmental Laboratory Accreditation program, Certificate # 1991

Report prepared for: Charlie Almestad
KLEINFELDER

Date Received: 9/25/2008
Date Reported: 10/3/2008

Client Sample ID: CompT-A(1A-1C)
Sample Location: CTO
Sample Matrix: SOIL
Date/Time Sampled 9/23/2008

Lab Sample ID: 0809187-029
Date Prepared: 9/29/2008

Parameters	Analysis Method	Date Analyzed	RL	Dilution Factor	MRL	Result	Units	Analytical Batch
Antimony	SW6010B	9/29/2008	5	1	5.0	ND	mg/Kg	4626
Arsenic	SW6010B	9/29/2008	1.7	1	1.7	2.1	mg/Kg	4626
Barium	SW6010B	9/29/2008	5	1	5.0	50	mg/Kg	4626
Beryllium	SW6010B	9/29/2008	2	1	2.0	ND	mg/Kg	4626
Cadmium	SW6010B	9/29/2008	1	1	1.0	ND	mg/Kg	4626
Chromium	SW6010B	9/29/2008	5	1	5.0	37	mg/Kg	4626
Cobalt	SW6010B	9/29/2008	5	1	5.0	5.7	mg/Kg	4626
Copper	SW6010B	9/29/2008	5	1	5.0	5.7	mg/Kg	4626
Lead	SW6010B	9/29/2008	1	1	1.0	3.4	mg/Kg	4626
Molybdenum	SW6010B	9/29/2008	5	1	5.0	ND	mg/Kg	4626
Nickel	SW6010B	9/29/2008	5	1	5.0	27	mg/Kg	4626
Selenium	SW6010B	9/29/2008	5	1	5.0	ND	mg/Kg	4626
Silver	SW6010B	9/29/2008	1	1	1.0	1.0	mg/Kg	4626
Thallium	SW6010B	9/29/2008	5	1	5.0	ND	mg/Kg	4626
Vanadium	SW6010B	9/29/2008	5	1	5.0	30	mg/Kg	4626
Zinc	SW6010B	9/29/2008	5	1	5.0	17	mg/Kg	4626
Mercury	SW7471A	9/30/2008	0.1	1	0.10	ND	mg/Kg	4632
TPH (Diesel)	SW8015B	9/30/2008	2	1	2.00	ND	mg/Kg	R17488
Surr: Pentacosane	SW8015B	9/30/2008	0	1	59.7-129	67.9	%REC	R17488
TPH (Gasoline)	SW8015B	10/3/2008	0.1	1	0.100	ND	mg/Kg	G17507
Surr: Trifluorotoluene	SW8015B	10/3/2008	0	1	65-135	88.6	%REC	G17507

These analyses were performed according to State of California Environmental Laboratory Accreditation program, Certificate # 1991

Report prepared for: Charlie Almestad
KLEINFELDER

Date Received: 9/25/2008
Date Reported: 10/3/2008

Client Sample ID: CompT-A(1A-1C)
Sample Location: CTO
Sample Matrix: SOIL
Date/Time Sampled 9/23/2008

Lab Sample ID: 0809187-029
Date Prepared: 9/29/2008

Parameters	Analysis Method	Date Analyzed	RL	Dilution Factor	MRL	Result	Units	Analytical Batch
1,1,1,2-Tetrachloroethane	SW8260B	9/30/2008	10	1	10	ND	µg/Kg	R17471
1,1,1-Trichloroethane	SW8260B	9/30/2008	10	1	10	ND	µg/Kg	R17471
1,1,2,2-Tetrachloroethane	SW8260B	9/30/2008	10	1	10	ND	µg/Kg	R17471
1,1,2-Trichloroethane	SW8260B	9/30/2008	10	1	10	ND	µg/Kg	R17471
1,1-Dichloroethane	SW8260B	9/30/2008	10	1	10	ND	µg/Kg	R17471
1,1-Dichloroethene	SW8260B	9/30/2008	10	1	10	ND	µg/Kg	R17471
1,1-Dichloropropene	SW8260B	9/30/2008	10	1	10	ND	µg/Kg	R17471
1,2,3-Trichlorobenzene	SW8260B	9/30/2008	10	1	10	ND	µg/Kg	R17471
1,2,3-Trichloropropane	SW8260B	9/30/2008	10	1	10	ND	µg/Kg	R17471
1,2,4-Trichlorobenzene	SW8260B	9/30/2008	10	1	10	ND	µg/Kg	R17471
1,2,4-Trimethylbenzene	SW8260B	9/30/2008	10	1	10	ND	µg/Kg	R17471
1,2-Dibromo-3-chloropropane	SW8260B	9/30/2008	10	1	10	ND	µg/Kg	R17471
1,2-Dibromoethane (EDB)	SW8260B	9/30/2008	10	1	10	ND	µg/Kg	R17471
1,2-Dichlorobenzene	SW8260B	9/30/2008	10	1	10	ND	µg/Kg	R17471
1,2-Dichloroethane (EDC)	SW8260B	9/30/2008	10	1	10	ND	µg/Kg	R17471
1,2-Dichloropropane	SW8260B	9/30/2008	10	1	10	ND	µg/Kg	R17471
1,3,5-Trimethylbenzene	SW8260B	9/30/2008	10	1	10	ND	µg/Kg	R17471
1,3-Dichlorobenzene	SW8260B	9/30/2008	10	1	10	ND	µg/Kg	R17471
1,4-Dichlorobenzene	SW8260B	9/30/2008	10	1	10	ND	µg/Kg	R17471
2,2-Dichloropropane	SW8260B	9/30/2008	10	1	10	ND	µg/Kg	R17471
2-Chloroethyl vinyl ether	SW8260B	9/30/2008	10	1	10	ND	µg/Kg	R17471
2-Chlorotoluene	SW8260B	9/30/2008	10	1	10	ND	µg/Kg	R17471
4-Chlorotoluene	SW8260B	9/30/2008	10	1	10	ND	µg/Kg	R17471
4-Isopropyltoluene	SW8260B	9/30/2008	10	1	10	ND	µg/Kg	R17471
Benzene	SW8260B	9/30/2008	10	1	10	ND	µg/Kg	R17471
Bromobenzene	SW8260B	9/30/2008	10	1	10	ND	µg/Kg	R17471
Bromochloromethane	SW8260B	9/30/2008	10	1	10	ND	µg/Kg	R17471
Bromodichloromethane	SW8260B	9/30/2008	10	1	10	ND	µg/Kg	R17471
Bromoform	SW8260B	9/30/2008	10	1	10	ND	µg/Kg	R17471
Bromomethane	SW8260B	9/30/2008	10	1	10	ND	µg/Kg	R17471
Carbon tetrachloride	SW8260B	9/30/2008	10	1	10	ND	µg/Kg	R17471
Chlorobenzene	SW8260B	9/30/2008	10	1	10	ND	µg/Kg	R17471
Chloroform	SW8260B	9/30/2008	10	1	10	ND	µg/Kg	R17471
Chloromethane	SW8260B	9/30/2008	10	1	10	ND	µg/Kg	R17471
cis-1,2-Dichloroethene	SW8260B	9/30/2008	10	1	10	ND	µg/Kg	R17471
cis-1,3-Dichloropropene	SW8260B	9/30/2008	10	1	10	ND	µg/Kg	R17471
Dibromochloromethane	SW8260B	9/30/2008	10	1	10	ND	µg/Kg	R17471
Dibromomethane	SW8260B	9/30/2008	10	1	10	ND	µg/Kg	R17471
Dichlorodifluoromethane	SW8260B	9/30/2008	10	1	10	ND	µg/Kg	R17471
Ethyl tert-butyl ether (ETBE)	SW8260B	9/30/2008	10	1	10	ND	µg/Kg	R17471
Ethylbenzene	SW8260B	9/30/2008	10	1	10	ND	µg/Kg	R17471
Freon-113	SW8260B	9/30/2008	10	1	10	ND	µg/Kg	R17471
Hexachlorobutadiene	SW8260B	9/30/2008	10	1	10	ND	µg/Kg	R17471

These analyses were performed according to State of California Environmental Laboratory Accreditation program, Certificate # 1991

Report prepared for: Charlie Almestad
KLEINFELDER

Date Received: 9/25/2008
Date Reported: 10/3/2008

Client Sample ID: CompT-A(1A-1C)
Sample Location: CTO
Sample Matrix: SOIL
Date/Time Sampled 9/23/2008

Lab Sample ID: 0809187-029
Date Prepared: 9/29/2008

Parameters	Analysis Method	Date Analyzed	RL	Dilution Factor	MRL	Result	Units	Analytical Batch
Isopropyl Ether	SW8260B	9/30/2008	10	1	10	ND	µg/Kg	R17471
Isopropylbenzene	SW8260B	9/30/2008	10	1	10	ND	µg/Kg	R17471
Methyl tert-butyl ether (MTBE)	SW8260B	9/30/2008	10	1	10	ND	µg/Kg	R17471
Methylene chloride	SW8260B	9/30/2008	50	1	50	ND	µg/Kg	R17471
Naphthalene	SW8260B	9/30/2008	20	1	20	ND	µg/Kg	R17471
n-Butylbenzene	SW8260B	9/30/2008	10	1	10	ND	µg/Kg	R17471
n-Propylbenzene	SW8260B	9/30/2008	10	1	10	ND	µg/Kg	R17471
sec-Butylbenzene	SW8260B	9/30/2008	10	1	10	ND	µg/Kg	R17471
Styrene	SW8260B	9/30/2008	10	1	10	ND	µg/Kg	R17471
t-Butyl alcohol (t-Butanol)	SW8260B	9/30/2008	50	1	50	ND	µg/Kg	R17471
tert-Amyl methyl ether (TAME)	SW8260B	9/30/2008	10	1	10	ND	µg/Kg	R17471
tert-Butylbenzene	SW8260B	9/30/2008	10	1	10	ND	µg/Kg	R17471
Tetrachloroethene	SW8260B	9/30/2008	10	1	10	ND	µg/Kg	R17471
Toluene	SW8260B	9/30/2008	10	1	10	ND	µg/Kg	R17471
trans-1,2-Dichloroethene	SW8260B	9/30/2008	10	1	10	ND	µg/Kg	R17471
trans-1,3-Dichloropropene	SW8260B	9/30/2008	10	1	10	ND	µg/Kg	R17471
Trichloroethene	SW8260B	9/30/2008	10	1	10	ND	µg/Kg	R17471
Trichlorofluoromethane	SW8260B	9/30/2008	10	1	10	ND	µg/Kg	R17471
Vinyl chloride	SW8260B	9/30/2008	10	1	10	ND	µg/Kg	R17471
Xylenes, Total	SW8260B	9/30/2008	15	1	15	ND	µg/Kg	R17471
Surr: 4-Bromofluorobenzene	SW8260B	9/30/2008	0	1	55.8-141	84.4	%REC	R17471
Surr: Dibromofluoromethane	SW8260B	9/30/2008	0	1	59.8-148	129	%REC	R17471
Surr: Toluene-d8	SW8260B	9/30/2008	0	1	55.2-133	85.8	%REC	R17471

These analyses were performed according to State of California Environmental Laboratory Accreditation program, Certificate # 1991

Report prepared for: Charlie Almestad
KLEINFELDER

Date Received: 9/25/2008
Date Reported: 10/3/2008

Client Sample ID: CompT-A(1A-1C)
Sample Location: CTO
Sample Matrix: SOIL
Date/Time Sampled 9/23/2008

Lab Sample ID: 0809187-029
Date Prepared: 9/29/2008

Parameters	Analysis Method	Date Analyzed	RL	Dilution Factor	MRL	Result	Units	Analytical Batch
1,2,4-Trichlorobenzene	SW8270C	10/1/2008	0.33	1	0.330	ND	mg/Kg	R17469
1,2-Dichlorobenzene	SW8270C	10/1/2008	0.33	1	0.330	ND	mg/Kg	R17469
1,3-Dichlorobenzene	SW8270C	10/1/2008	0.33	1	0.330	ND	mg/Kg	R17469
1,4-Dichlorobenzene	SW8270C	10/1/2008	0.33	1	0.330	ND	mg/Kg	R17469
2,4,5-Trichlorophenol	SW8270C	10/1/2008	0.33	1	0.330	ND	mg/Kg	R17469
2,4,6-Trichlorophenol	SW8270C	10/1/2008	0.33	1	0.330	ND	mg/Kg	R17469
2,4-Dichlorophenol	SW8270C	10/1/2008	0.33	1	0.330	ND	mg/Kg	R17469
2,4-Dimethylphenol	SW8270C	10/1/2008	0.66	1	0.660	ND	mg/Kg	R17469
2,4-Dinitrophenol	SW8270C	10/1/2008	1.7	1	1.70	ND	mg/Kg	R17469
2,4-Dinitrotoluene	SW8270C	10/1/2008	0.33	1	0.330	ND	mg/Kg	R17469
2,6-Dinitrotoluene	SW8270C	10/1/2008	0.33	1	0.330	ND	mg/Kg	R17469
2-Chloronaphthalene	SW8270C	10/1/2008	0.33	1	0.330	ND	mg/Kg	R17469
2-Chlorophenol	SW8270C	10/1/2008	0.33	1	0.330	ND	mg/Kg	R17469
2-Methylnaphthalene	SW8270C	10/1/2008	0.33	1	0.330	ND	mg/Kg	R17469
2-Methylphenol	SW8270C	10/1/2008	0.33	1	0.330	ND	mg/Kg	R17469
2-Nitroaniline	SW8270C	10/1/2008	0.33	1	0.330	ND	mg/Kg	R17469
2-Nitrophenol	SW8270C	10/1/2008	0.66	1	0.660	ND	mg/Kg	R17469
3,3´-Dichlorobenzidine	SW8270C	10/1/2008	1.7	1	1.70	ND	mg/Kg	R17469
3-Methylphenol	SW8270C	10/1/2008	0.33	1	0.330	ND	mg/Kg	R17469
3-Nitroaniline	SW8270C	10/1/2008	0.33	1	0.330	ND	mg/Kg	R17469
4,6-Dinitro-2-methylphenol	SW8270C	10/1/2008	0.33	1	0.330	ND	mg/Kg	R17469
4-Bromophenyl phenyl ether	SW8270C	10/1/2008	0.33	1	0.330	ND	mg/Kg	R17469
4-Chloro-3-methylphenol	SW8270C	10/1/2008	0.33	1	0.330	ND	mg/Kg	R17469
4-Chloroaniline	SW8270C	10/1/2008	0.33	1	0.330	ND	mg/Kg	R17469
4-Chlorophenyl phenyl ether	SW8270C	10/1/2008	0.33	1	0.330	ND	mg/Kg	R17469
4-Methylphenol	SW8270C	10/1/2008	0.33	1	0.330	ND	mg/Kg	R17469
4-Nitroaniline	SW8270C	10/1/2008	0.33	1	0.330	ND	mg/Kg	R17469
4-Nitrophenol	SW8270C	10/1/2008	0.33	1	0.330	ND	mg/Kg	R17469
Acenaphthene	SW8270C	10/1/2008	0.33	1	0.330	ND	mg/Kg	R17469
Acenaphthylene	SW8270C	10/1/2008	0.33	1	0.330	ND	mg/Kg	R17469
Aniline	SW8270C	10/1/2008	0.33	1	0.330	ND	mg/Kg	R17469
Anthracene	SW8270C	10/1/2008	0.33	1	0.330	ND	mg/Kg	R17469
Benz(a)anthracene	SW8270C	10/1/2008	0.33	1	0.330	ND	mg/Kg	R17469
Benzidine	SW8270C	10/1/2008	3.3	1	3.30	ND	mg/Kg	R17469
Benzo(g,h,i)perylene	SW8270C	10/1/2008	0.33	1	0.330	ND	mg/Kg	R17469
Benzo[a]pyrene	SW8270C	10/1/2008	0.33	1	0.330	ND	mg/Kg	R17469
Benzo[b]fluoranthene	SW8270C	10/1/2008	0.33	1	0.330	ND	mg/Kg	R17469
Benzo[k]fluoranthene	SW8270C	10/1/2008	0.33	1	0.330	ND	mg/Kg	R17469
Benzoic acid	SW8270C	10/1/2008	6.66	1	6.66	ND	mg/Kg	R17469
Benzyl alcohol	SW8270C	10/1/2008	6.66	1	6.66	ND	mg/Kg	R17469
Bis(2-chloroethoxy)methane	SW8270C	10/1/2008	0.33	1	0.330	ND	mg/Kg	R17469
Bis(2-chloroethyl)ether	SW8270C	10/1/2008	0.33	1	0.330	ND	mg/Kg	R17469
Bis(2-chloroisopropyl)ether	SW8270C	10/1/2008	0.33	1	0.330	ND	mg/Kg	R17469

These analyses were performed according to State of California Environmental Laboratory Accreditation program, Certificate # 1991

Report prepared for: Charlie Almestad
KLEINFELDER

Date Received: 9/25/2008
Date Reported: 10/3/2008

Client Sample ID: CompT-A(1A-1C)
Sample Location: CTO
Sample Matrix: SOIL
Date/Time Sampled 9/23/2008

Lab Sample ID: 0809187-029
Date Prepared: 9/29/2008

Parameters	Analysis Method	Date Analyzed	RL	Dilution Factor	MRL	Result	Units	Analytical Batch
Bis(2-ethylhexyl)phthalate	SW8270C	10/1/2008	3.3	1	3.30	ND	mg/Kg	R17469
Butyl benzyl phthalate	SW8270C	10/1/2008	0.33	1	0.330	ND	mg/Kg	R17469
Chrysene	SW8270C	10/1/2008	0.66	1	0.660	ND	mg/Kg	R17469
Dibenz(a,h)anthracene	SW8270C	10/1/2008	0.33	1	0.330	ND	mg/Kg	R17469
Dibenzofuran	SW8270C	10/1/2008	0.33	1	0.330	ND	mg/Kg	R17469
Diethyl phthalate	SW8270C	10/1/2008	3.3	1	3.30	ND	mg/Kg	R17469
Dimethyl phthalate	SW8270C	10/1/2008	3.3	1	3.30	ND	mg/Kg	R17469
Di-n-butyl phthalate	SW8270C	10/1/2008	3.3	1	3.30	ND	mg/Kg	R17469
Di-n-octyl phthalate	SW8270C	10/1/2008	0.33	1	0.330	ND	mg/Kg	R17469
Fluoranthene	SW8270C	10/1/2008	0.33	1	0.330	ND	mg/Kg	R17469
Fluorene	SW8270C	10/1/2008	0.33	1	0.330	ND	mg/Kg	R17469
Hexachlorobenzene	SW8270C	10/1/2008	0.33	1	0.330	ND	mg/Kg	R17469
Hexachlorobutadiene	SW8270C	10/1/2008	0.33	1	0.330	ND	mg/Kg	R17469
Hexachlorocyclopentadiene	SW8270C	10/1/2008	0.33	1	0.330	ND	mg/Kg	R17469
Hexachloroethane	SW8270C	10/1/2008	0.33	1	0.330	ND	mg/Kg	R17469
Indeno(1,2,3-cd)pyrene	SW8270C	10/1/2008	0.33	1	0.330	ND	mg/Kg	R17469
Isophorone	SW8270C	10/1/2008	0.33	1	0.330	ND	mg/Kg	R17469
Naphthalene	SW8270C	10/1/2008	0.33	1	0.330	ND	mg/Kg	R17469
Nitrobenzene	SW8270C	10/1/2008	0.33	1	0.330	ND	mg/Kg	R17469
N-Nitrosodimethylamine	SW8270C	10/1/2008	0.33	1	0.330	ND	mg/Kg	R17469
N-Nitrosodi-n-propylamine	SW8270C	10/1/2008	0.33	1	0.330	ND	mg/Kg	R17469
N-Nitrosodiphenylamine	SW8270C	10/1/2008	0.33	1	0.330	ND	mg/Kg	R17469
Pentachlorophenol	SW8270C	10/1/2008	0.33	1	0.330	ND	mg/Kg	R17469
Phenanthrene	SW8270C	10/1/2008	0.33	1	0.330	ND	mg/Kg	R17469
Phenol	SW8270C	10/1/2008	0.33	1	0.330	ND	mg/Kg	R17469
Pyrene	SW8270C	10/1/2008	0.33	1	0.330	ND	mg/Kg	R17469
Surr: 2,4,6-Tribromophenol	SW8270C	10/1/2008	0	1	16.5-114	41.4	%REC	R17469
Surr: 2-Fluorobiphenyl	SW8270C	10/1/2008	0	1	24.1-85.6	35.3	%REC	R17469
Surr: 2-Fluorophenol	SW8270C	10/1/2008	0	1	30.3-76.6	48.6	%REC	R17469
Surr: Nitrobenzene-d5	SW8270C	10/1/2008	0	1	29.4-78.2	50.6	%REC	R17469
Surr: Phenol-d6	SW8270C	10/1/2008	0	1	28.7-84.7	39.4	%REC	R17469
Surr: p-Terphenyl-d14	SW8270C	10/1/2008	0	1	37.9-127	75.3	%REC	R17469

These analyses were performed according to State of California Environmental Laboratory Accreditation program, Certificate # 1991

Report prepared for: Charlie Almestad
KLEINFELDER

Date Received: 9/25/2008
Date Reported: 10/3/2008

Client Sample ID: CompT-C(1A-1D)
Sample Location: CTO
Sample Matrix: SOIL
Date/Time Sampled 9/23/2008

Lab Sample ID: 0809187-030
Date Prepared: 9/29/2008

Parameters	Analysis Method	Date Analyzed	RL	Dilution Factor	MRL	Result	Units	Analytical Batch
Antimony	SW6010B	9/29/2008	5	1	5.0	ND	mg/Kg	4626
Arsenic	SW6010B	9/29/2008	1.7	1	1.7	1.8	mg/Kg	4626
Barium	SW6010B	9/29/2008	5	1	5.0	49	mg/Kg	4626
Beryllium	SW6010B	9/29/2008	2	1	2.0	ND	mg/Kg	4626
Cadmium	SW6010B	9/29/2008	1	1	1.0	ND	mg/Kg	4626
Chromium	SW6010B	9/29/2008	5	1	5.0	36	mg/Kg	4626
Cobalt	SW6010B	9/29/2008	5	1	5.0	5.2	mg/Kg	4626
Copper	SW6010B	9/29/2008	5	1	5.0	5.6	mg/Kg	4626
Lead	SW6010B	9/29/2008	1	1	1.0	2.6	mg/Kg	4626
Molybdenum	SW6010B	9/29/2008	5	1	5.0	ND	mg/Kg	4626
Nickel	SW6010B	9/29/2008	5	1	5.0	28	mg/Kg	4626
Selenium	SW6010B	9/29/2008	5	1	5.0	ND	mg/Kg	4626
Silver	SW6010B	9/29/2008	1	1	1.0	ND	mg/Kg	4626
Thallium	SW6010B	9/29/2008	5	1	5.0	ND	mg/Kg	4626
Vanadium	SW6010B	9/29/2008	5	1	5.0	27	mg/Kg	4626
Zinc	SW6010B	9/29/2008	5	1	5.0	18	mg/Kg	4626
Mercury	SW7471A	9/30/2008	0.1	1	0.10	ND	mg/Kg	4632
TPH (Diesel)	SW8015B	9/30/2008	2	1	2.00	ND	mg/Kg	R17488
Surr: Pentacosane	SW8015B	9/30/2008	0	1	59.7-129	85.3	%REC	R17488
TPH (Gasoline)	SW8015B	10/3/2008	0.1	1	0.100	ND	mg/Kg	G17507
Surr: Trifluorotoluene	SW8015B	10/3/2008	0	1	65-135	87.3	%REC	G17507

These analyses were performed according to State of California Environmental Laboratory Accreditation program, Certificate # 1991

Report prepared for: Charlie Almestad
KLEINFELDER

Date Received: 9/25/2008
Date Reported: 10/3/2008

Client Sample ID: CompT-C(1A-1D)
Sample Location: CTO
Sample Matrix: SOIL
Date/Time Sampled 9/23/2008

Lab Sample ID: 0809187-030
Date Prepared: 9/29/2008

Parameters	Analysis Method	Date Analyzed	RL	Dilution Factor	MRL	Result	Units	Analytical Batch
1,1,1,2-Tetrachloroethane	SW8260B	9/30/2008	10	1	10	ND	µg/Kg	R17471
1,1,1-Trichloroethane	SW8260B	9/30/2008	10	1	10	ND	µg/Kg	R17471
1,1,2,2-Tetrachloroethane	SW8260B	9/30/2008	10	1	10	ND	µg/Kg	R17471
1,1,2-Trichloroethane	SW8260B	9/30/2008	10	1	10	ND	µg/Kg	R17471
1,1-Dichloroethane	SW8260B	9/30/2008	10	1	10	ND	µg/Kg	R17471
1,1-Dichloroethene	SW8260B	9/30/2008	10	1	10	ND	µg/Kg	R17471
1,1-Dichloropropene	SW8260B	9/30/2008	10	1	10	ND	µg/Kg	R17471
1,2,3-Trichlorobenzene	SW8260B	9/30/2008	10	1	10	ND	µg/Kg	R17471
1,2,3-Trichloropropane	SW8260B	9/30/2008	10	1	10	ND	µg/Kg	R17471
1,2,4-Trichlorobenzene	SW8260B	9/30/2008	10	1	10	ND	µg/Kg	R17471
1,2,4-Trimethylbenzene	SW8260B	9/30/2008	10	1	10	ND	µg/Kg	R17471
1,2-Dibromo-3-chloropropane	SW8260B	9/30/2008	10	1	10	ND	µg/Kg	R17471
1,2-Dibromoethane (EDB)	SW8260B	9/30/2008	10	1	10	ND	µg/Kg	R17471
1,2-Dichlorobenzene	SW8260B	9/30/2008	10	1	10	ND	µg/Kg	R17471
1,2-Dichloroethane (EDC)	SW8260B	9/30/2008	10	1	10	ND	µg/Kg	R17471
1,2-Dichloropropane	SW8260B	9/30/2008	10	1	10	ND	µg/Kg	R17471
1,3,5-Trimethylbenzene	SW8260B	9/30/2008	10	1	10	ND	µg/Kg	R17471
1,3-Dichlorobenzene	SW8260B	9/30/2008	10	1	10	ND	µg/Kg	R17471
1,4-Dichlorobenzene	SW8260B	9/30/2008	10	1	10	ND	µg/Kg	R17471
2,2-Dichloropropane	SW8260B	9/30/2008	10	1	10	ND	µg/Kg	R17471
2-Chloroethyl vinyl ether	SW8260B	9/30/2008	10	1	10	ND	µg/Kg	R17471
2-Chlorotoluene	SW8260B	9/30/2008	10	1	10	ND	µg/Kg	R17471
4-Chlorotoluene	SW8260B	9/30/2008	10	1	10	ND	µg/Kg	R17471
4-Isopropyltoluene	SW8260B	9/30/2008	10	1	10	ND	µg/Kg	R17471
Benzene	SW8260B	9/30/2008	10	1	10	ND	µg/Kg	R17471
Bromobenzene	SW8260B	9/30/2008	10	1	10	ND	µg/Kg	R17471
Bromochloromethane	SW8260B	9/30/2008	10	1	10	ND	µg/Kg	R17471
Bromodichloromethane	SW8260B	9/30/2008	10	1	10	ND	µg/Kg	R17471
Bromoform	SW8260B	9/30/2008	10	1	10	ND	µg/Kg	R17471
Bromomethane	SW8260B	9/30/2008	10	1	10	ND	µg/Kg	R17471
Carbon tetrachloride	SW8260B	9/30/2008	10	1	10	ND	µg/Kg	R17471
Chlorobenzene	SW8260B	9/30/2008	10	1	10	ND	µg/Kg	R17471
Chloroform	SW8260B	9/30/2008	10	1	10	ND	µg/Kg	R17471
Chloromethane	SW8260B	9/30/2008	10	1	10	ND	µg/Kg	R17471
cis-1,2-Dichloroethene	SW8260B	9/30/2008	10	1	10	ND	µg/Kg	R17471
cis-1,3-Dichloropropene	SW8260B	9/30/2008	10	1	10	ND	µg/Kg	R17471
Dibromochloromethane	SW8260B	9/30/2008	10	1	10	ND	µg/Kg	R17471
Dibromomethane	SW8260B	9/30/2008	10	1	10	ND	µg/Kg	R17471
Dichlorodifluoromethane	SW8260B	9/30/2008	10	1	10	ND	µg/Kg	R17471
Ethyl tert-butyl ether (ETBE)	SW8260B	9/30/2008	10	1	10	ND	µg/Kg	R17471
Ethylbenzene	SW8260B	9/30/2008	10	1	10	ND	µg/Kg	R17471
Freon-113	SW8260B	9/30/2008	10	1	10	ND	µg/Kg	R17471
Hexachlorobutadiene	SW8260B	9/30/2008	10	1	10	ND	µg/Kg	R17471

These analyses were performed according to State of California Environmental Laboratory Accreditation program, Certificate # 1991

Report prepared for: Charlie Almestad
KLEINFELDER

Date Received: 9/25/2008
Date Reported: 10/3/2008

Client Sample ID: CompT-C(1A-1D)
Sample Location: CTO
Sample Matrix: SOIL
Date/Time Sampled 9/23/2008

Lab Sample ID: 0809187-030
Date Prepared: 9/29/2008

Parameters	Analysis Method	Date Analyzed	RL	Dilution Factor	MRL	Result	Units	Analytical Batch
Isopropyl Ether	SW8260B	9/30/2008	10	1	10	ND	µg/Kg	R17471
Isopropylbenzene	SW8260B	9/30/2008	10	1	10	ND	µg/Kg	R17471
Methyl tert-butyl ether (MTBE)	SW8260B	9/30/2008	10	1	10	ND	µg/Kg	R17471
Methylene chloride	SW8260B	9/30/2008	50	1	50	ND	µg/Kg	R17471
Naphthalene	SW8260B	9/30/2008	20	1	20	ND	µg/Kg	R17471
n-Butylbenzene	SW8260B	9/30/2008	10	1	10	ND	µg/Kg	R17471
n-Propylbenzene	SW8260B	9/30/2008	10	1	10	ND	µg/Kg	R17471
sec-Butylbenzene	SW8260B	9/30/2008	10	1	10	ND	µg/Kg	R17471
Styrene	SW8260B	9/30/2008	10	1	10	ND	µg/Kg	R17471
t-Butyl alcohol (t-Butanol)	SW8260B	9/30/2008	50	1	50	ND	µg/Kg	R17471
tert-Amyl methyl ether (TAME)	SW8260B	9/30/2008	10	1	10	ND	µg/Kg	R17471
tert-Butylbenzene	SW8260B	9/30/2008	10	1	10	ND	µg/Kg	R17471
Tetrachloroethene	SW8260B	9/30/2008	10	1	10	ND	µg/Kg	R17471
Toluene	SW8260B	9/30/2008	10	1	10	ND	µg/Kg	R17471
trans-1,2-Dichloroethene	SW8260B	9/30/2008	10	1	10	ND	µg/Kg	R17471
trans-1,3-Dichloropropene	SW8260B	9/30/2008	10	1	10	ND	µg/Kg	R17471
Trichloroethene	SW8260B	9/30/2008	10	1	10	ND	µg/Kg	R17471
Trichlorofluoromethane	SW8260B	9/30/2008	10	1	10	ND	µg/Kg	R17471
Vinyl chloride	SW8260B	9/30/2008	10	1	10	ND	µg/Kg	R17471
Xylenes, Total	SW8260B	9/30/2008	15	1	15	ND	µg/Kg	R17471
Surr: 4-Bromofluorobenzene	SW8260B	9/30/2008	0	1	55.8-141	98.9	%REC	R17471
Surr: Dibromofluoromethane	SW8260B	9/30/2008	0	1	59.8-148	129	%REC	R17471
Surr: Toluene-d8	SW8260B	9/30/2008	0	1	55.2-133	85.6	%REC	R17471

These analyses were performed according to State of California Environmental Laboratory Accreditation program, Certificate # 1991

Report prepared for: Charlie Almestad
KLEINFELDER

Date Received: 9/25/2008
Date Reported: 10/3/2008

Client Sample ID: CompT-C(1A-1D)
Sample Location: CTO
Sample Matrix: SOIL
Date/Time Sampled 9/23/2008

Lab Sample ID: 0809187-030
Date Prepared: 9/29/2008

Parameters	Analysis Method	Date Analyzed	RL	Dilution Factor	MRL	Result	Units	Analytical Batch
1,2,4-Trichlorobenzene	SW8270C	10/1/2008	0.33	1	0.330	ND	mg/Kg	R17469
1,2-Dichlorobenzene	SW8270C	10/1/2008	0.33	1	0.330	ND	mg/Kg	R17469
1,3-Dichlorobenzene	SW8270C	10/1/2008	0.33	1	0.330	ND	mg/Kg	R17469
1,4-Dichlorobenzene	SW8270C	10/1/2008	0.33	1	0.330	ND	mg/Kg	R17469
2,4,5-Trichlorophenol	SW8270C	10/1/2008	0.33	1	0.330	ND	mg/Kg	R17469
2,4,6-Trichlorophenol	SW8270C	10/1/2008	0.33	1	0.330	ND	mg/Kg	R17469
2,4-Dichlorophenol	SW8270C	10/1/2008	0.33	1	0.330	ND	mg/Kg	R17469
2,4-Dimethylphenol	SW8270C	10/1/2008	0.66	1	0.660	ND	mg/Kg	R17469
2,4-Dinitrophenol	SW8270C	10/1/2008	1.7	1	1.70	ND	mg/Kg	R17469
2,4-Dinitrotoluene	SW8270C	10/1/2008	0.33	1	0.330	ND	mg/Kg	R17469
2,6-Dinitrotoluene	SW8270C	10/1/2008	0.33	1	0.330	ND	mg/Kg	R17469
2-Chloronaphthalene	SW8270C	10/1/2008	0.33	1	0.330	ND	mg/Kg	R17469
2-Chlorophenol	SW8270C	10/1/2008	0.33	1	0.330	ND	mg/Kg	R17469
2-Methylnaphthalene	SW8270C	10/1/2008	0.33	1	0.330	ND	mg/Kg	R17469
2-Methylphenol	SW8270C	10/1/2008	0.33	1	0.330	ND	mg/Kg	R17469
2-Nitroaniline	SW8270C	10/1/2008	0.33	1	0.330	ND	mg/Kg	R17469
2-Nitrophenol	SW8270C	10/1/2008	0.66	1	0.660	ND	mg/Kg	R17469
3,3´-Dichlorobenzidine	SW8270C	10/1/2008	1.7	1	1.70	ND	mg/Kg	R17469
3-Methylphenol	SW8270C	10/1/2008	0.33	1	0.330	ND	mg/Kg	R17469
3-Nitroaniline	SW8270C	10/1/2008	0.33	1	0.330	ND	mg/Kg	R17469
4,6-Dinitro-2-methylphenol	SW8270C	10/1/2008	0.33	1	0.330	ND	mg/Kg	R17469
4-Bromophenyl phenyl ether	SW8270C	10/1/2008	0.33	1	0.330	ND	mg/Kg	R17469
4-Chloro-3-methylphenol	SW8270C	10/1/2008	0.33	1	0.330	ND	mg/Kg	R17469
4-Chloroaniline	SW8270C	10/1/2008	0.33	1	0.330	ND	mg/Kg	R17469
4-Chlorophenyl phenyl ether	SW8270C	10/1/2008	0.33	1	0.330	ND	mg/Kg	R17469
4-Methylphenol	SW8270C	10/1/2008	0.33	1	0.330	ND	mg/Kg	R17469
4-Nitroaniline	SW8270C	10/1/2008	0.33	1	0.330	ND	mg/Kg	R17469
4-Nitrophenol	SW8270C	10/1/2008	0.33	1	0.330	ND	mg/Kg	R17469
Acenaphthene	SW8270C	10/1/2008	0.33	1	0.330	ND	mg/Kg	R17469
Acenaphthylene	SW8270C	10/1/2008	0.33	1	0.330	ND	mg/Kg	R17469
Aniline	SW8270C	10/1/2008	0.33	1	0.330	ND	mg/Kg	R17469
Anthracene	SW8270C	10/1/2008	0.33	1	0.330	ND	mg/Kg	R17469
Benz(a)anthracene	SW8270C	10/1/2008	0.33	1	0.330	ND	mg/Kg	R17469
Benzidine	SW8270C	10/1/2008	3.3	1	3.30	ND	mg/Kg	R17469
Benzo(g,h,i)perylene	SW8270C	10/1/2008	0.33	1	0.330	ND	mg/Kg	R17469
Benzo[a]pyrene	SW8270C	10/1/2008	0.33	1	0.330	ND	mg/Kg	R17469
Benzo[b]fluoranthene	SW8270C	10/1/2008	0.33	1	0.330	ND	mg/Kg	R17469
Benzo[k]fluoranthene	SW8270C	10/1/2008	0.33	1	0.330	ND	mg/Kg	R17469
Benzoic acid	SW8270C	10/1/2008	6.66	1	6.66	ND	mg/Kg	R17469
Benzyl alcohol	SW8270C	10/1/2008	6.66	1	6.66	ND	mg/Kg	R17469
Bis(2-chloroethoxy)methane	SW8270C	10/1/2008	0.33	1	0.330	ND	mg/Kg	R17469
Bis(2-chloroethyl)ether	SW8270C	10/1/2008	0.33	1	0.330	ND	mg/Kg	R17469
Bis(2-chloroisopropyl)ether	SW8270C	10/1/2008	0.33	1	0.330	ND	mg/Kg	R17469

These analyses were performed according to State of California Environmental Laboratory Accreditation program, Certificate # 1991

Report prepared for: Charlie Almestad
KLEINFELDER

Date Received: 9/25/2008
Date Reported: 10/3/2008

Client Sample ID: CompT-C(1A-1D)
Sample Location: CTO
Sample Matrix: SOIL
Date/Time Sampled 9/23/2008

Lab Sample ID: 0809187-030
Date Prepared: 9/29/2008

Parameters	Analysis Method	Date Analyzed	RL	Dilution Factor	MRL	Result	Units	Analytical Batch
Bis(2-ethylhexyl)phthalate	SW8270C	10/1/2008	3.3	1	3.30	ND	mg/Kg	R17469
Butyl benzyl phthalate	SW8270C	10/1/2008	0.33	1	0.330	ND	mg/Kg	R17469
Chrysene	SW8270C	10/1/2008	0.66	1	0.660	ND	mg/Kg	R17469
Dibenz(a,h)anthracene	SW8270C	10/1/2008	0.33	1	0.330	ND	mg/Kg	R17469
Dibenzofuran	SW8270C	10/1/2008	0.33	1	0.330	ND	mg/Kg	R17469
Diethyl phthalate	SW8270C	10/1/2008	3.3	1	3.30	ND	mg/Kg	R17469
Dimethyl phthalate	SW8270C	10/1/2008	3.3	1	3.30	ND	mg/Kg	R17469
Di-n-butyl phthalate	SW8270C	10/1/2008	3.3	1	3.30	ND	mg/Kg	R17469
Di-n-octyl phthalate	SW8270C	10/1/2008	0.33	1	0.330	ND	mg/Kg	R17469
Fluoranthene	SW8270C	10/1/2008	0.33	1	0.330	ND	mg/Kg	R17469
Fluorene	SW8270C	10/1/2008	0.33	1	0.330	ND	mg/Kg	R17469
Hexachlorobenzene	SW8270C	10/1/2008	0.33	1	0.330	ND	mg/Kg	R17469
Hexachlorobutadiene	SW8270C	10/1/2008	0.33	1	0.330	ND	mg/Kg	R17469
Hexachlorocyclopentadiene	SW8270C	10/1/2008	0.33	1	0.330	ND	mg/Kg	R17469
Hexachloroethane	SW8270C	10/1/2008	0.33	1	0.330	ND	mg/Kg	R17469
Indeno(1,2,3-cd)pyrene	SW8270C	10/1/2008	0.33	1	0.330	ND	mg/Kg	R17469
Isophorone	SW8270C	10/1/2008	0.33	1	0.330	ND	mg/Kg	R17469
Naphthalene	SW8270C	10/1/2008	0.33	1	0.330	ND	mg/Kg	R17469
Nitrobenzene	SW8270C	10/1/2008	0.33	1	0.330	ND	mg/Kg	R17469
N-Nitrosodimethylamine	SW8270C	10/1/2008	0.33	1	0.330	ND	mg/Kg	R17469
N-Nitrosodi-n-propylamine	SW8270C	10/1/2008	0.33	1	0.330	ND	mg/Kg	R17469
N-Nitrosodiphenylamine	SW8270C	10/1/2008	0.33	1	0.330	ND	mg/Kg	R17469
Pentachlorophenol	SW8270C	10/1/2008	0.33	1	0.330	ND	mg/Kg	R17469
Phenanthrene	SW8270C	10/1/2008	0.33	1	0.330	ND	mg/Kg	R17469
Phenol	SW8270C	10/1/2008	0.33	1	0.330	ND	mg/Kg	R17469
Pyrene	SW8270C	10/1/2008	0.33	1	0.330	ND	mg/Kg	R17469
Surr: 2,4,6-Tribromophenol	SW8270C	10/1/2008	0	1	16.5-114	42.2	%REC	R17469
Surr: 2-Fluorobiphenyl	SW8270C	10/1/2008	0	1	24.1-85.6	32.5	%REC	R17469
Surr: 2-Fluorophenol	SW8270C	10/1/2008	0	1	30.3-76.6	42.6	%REC	R17469
Surr: Nitrobenzene-d5	SW8270C	10/1/2008	0	1	29.4-78.2	48.2	%REC	R17469
Surr: Phenol-d6	SW8270C	10/1/2008	0	1	28.7-84.7	34.8	%REC	R17469
Surr: p-Terphenyl-d14	SW8270C	10/1/2008	0	1	37.9-127	77.3	%REC	R17469

These analyses were performed according to State of California Environmental Laboratory Accreditation program, Certificate # 1991

Report prepared for: Charlie Almestad
KLEINFELDER

Date Received: 9/25/2008
Date Reported: 10/3/2008

Client Sample ID: CompT-B(1A-1D)
Sample Location: CTO
Sample Matrix: SOIL
Date/Time Sampled 9/23/2008

Lab Sample ID: 0809187-031
Date Prepared: 9/29/2008

Parameters	Analysis Method	Date Analyzed	RL	Dilution Factor	MRL	Result	Units	Analytical Batch
Antimony	SW6010B	9/29/2008	5	1	5.0	ND	mg/Kg	4626
Arsenic	SW6010B	9/29/2008	1.7	1	1.7	1.8	mg/Kg	4626
Barium	SW6010B	9/29/2008	5	1	5.0	46	mg/Kg	4626
Beryllium	SW6010B	9/29/2008	2	1	2.0	ND	mg/Kg	4626
Cadmium	SW6010B	9/29/2008	1	1	1.0	ND	mg/Kg	4626
Chromium	SW6010B	9/29/2008	5	1	5.0	33	mg/Kg	4626
Cobalt	SW6010B	9/29/2008	5	1	5.0	ND	mg/Kg	4626
Copper	SW6010B	9/29/2008	5	1	5.0	5.2	mg/Kg	4626
Lead	SW6010B	9/29/2008	1	1	1.0	3.4	mg/Kg	4626
Molybdenum	SW6010B	9/29/2008	5	1	5.0	ND	mg/Kg	4626
Nickel	SW6010B	9/29/2008	5	1	5.0	21	mg/Kg	4626
Selenium	SW6010B	9/29/2008	5	1	5.0	ND	mg/Kg	4626
Silver	SW6010B	9/29/2008	1	1	1.0	ND	mg/Kg	4626
Thallium	SW6010B	9/29/2008	5	1	5.0	ND	mg/Kg	4626
Vanadium	SW6010B	9/29/2008	5	1	5.0	23	mg/Kg	4626
Zinc	SW6010B	9/29/2008	5	1	5.0	16	mg/Kg	4626
Mercury	SW7471A	9/30/2008	0.1	1	0.10	ND	mg/Kg	4632
TPH (Diesel)	SW8015B	9/30/2008	2	1	2.00	ND	mg/Kg	R17488
Surr: Pentacosane	SW8015B	9/30/2008	0	1	59.7-129	85.4	%REC	R17488
TPH (Gasoline)	SW8015B	10/3/2008	0.1	1	0.100	ND	mg/Kg	G17507
Surr: Trifluorotoluene	SW8015B	10/3/2008	0	1	65-135	94.1	%REC	G17507

These analyses were performed according to State of California Environmental Laboratory Accreditation program, Certificate # 1991

Report prepared for: Charlie Almestad
KLEINFELDER

Date Received: 9/25/2008
Date Reported: 10/3/2008

Client Sample ID: CompT-B(1A-1D)
Sample Location: CTO
Sample Matrix: SOIL
Date/Time Sampled 9/23/2008

Lab Sample ID: 0809187-031
Date Prepared: 9/29/2008

Parameters	Analysis Method	Date Analyzed	RL	Dilution Factor	MRL	Result	Units	Analytical Batch
1,1,1,2-Tetrachloroethane	SW8260B	9/30/2008	10	1	10	ND	µg/Kg	R17471
1,1,1-Trichloroethane	SW8260B	9/30/2008	10	1	10	ND	µg/Kg	R17471
1,1,2,2-Tetrachloroethane	SW8260B	9/30/2008	10	1	10	ND	µg/Kg	R17471
1,1,2-Trichloroethane	SW8260B	9/30/2008	10	1	10	ND	µg/Kg	R17471
1,1-Dichloroethane	SW8260B	9/30/2008	10	1	10	ND	µg/Kg	R17471
1,1-Dichloroethene	SW8260B	9/30/2008	10	1	10	ND	µg/Kg	R17471
1,1-Dichloropropene	SW8260B	9/30/2008	10	1	10	ND	µg/Kg	R17471
1,2,3-Trichlorobenzene	SW8260B	9/30/2008	10	1	10	ND	µg/Kg	R17471
1,2,3-Trichloropropane	SW8260B	9/30/2008	10	1	10	ND	µg/Kg	R17471
1,2,4-Trichlorobenzene	SW8260B	9/30/2008	10	1	10	ND	µg/Kg	R17471
1,2,4-Trimethylbenzene	SW8260B	9/30/2008	10	1	10	ND	µg/Kg	R17471
1,2-Dibromo-3-chloropropane	SW8260B	9/30/2008	10	1	10	ND	µg/Kg	R17471
1,2-Dibromoethane (EDB)	SW8260B	9/30/2008	10	1	10	ND	µg/Kg	R17471
1,2-Dichlorobenzene	SW8260B	9/30/2008	10	1	10	ND	µg/Kg	R17471
1,2-Dichloroethane (EDC)	SW8260B	9/30/2008	10	1	10	ND	µg/Kg	R17471
1,2-Dichloropropane	SW8260B	9/30/2008	10	1	10	ND	µg/Kg	R17471
1,3,5-Trimethylbenzene	SW8260B	9/30/2008	10	1	10	ND	µg/Kg	R17471
1,3-Dichlorobenzene	SW8260B	9/30/2008	10	1	10	ND	µg/Kg	R17471
1,4-Dichlorobenzene	SW8260B	9/30/2008	10	1	10	ND	µg/Kg	R17471
2,2-Dichloropropane	SW8260B	9/30/2008	10	1	10	ND	µg/Kg	R17471
2-Chloroethyl vinyl ether	SW8260B	9/30/2008	10	1	10	ND	µg/Kg	R17471
2-Chlorotoluene	SW8260B	9/30/2008	10	1	10	ND	µg/Kg	R17471
4-Chlorotoluene	SW8260B	9/30/2008	10	1	10	ND	µg/Kg	R17471
4-Isopropyltoluene	SW8260B	9/30/2008	10	1	10	ND	µg/Kg	R17471
Benzene	SW8260B	9/30/2008	10	1	10	ND	µg/Kg	R17471
Bromobenzene	SW8260B	9/30/2008	10	1	10	ND	µg/Kg	R17471
Bromochloromethane	SW8260B	9/30/2008	10	1	10	ND	µg/Kg	R17471
Bromodichloromethane	SW8260B	9/30/2008	10	1	10	ND	µg/Kg	R17471
Bromoform	SW8260B	9/30/2008	10	1	10	ND	µg/Kg	R17471
Bromomethane	SW8260B	9/30/2008	10	1	10	ND	µg/Kg	R17471
Carbon tetrachloride	SW8260B	9/30/2008	10	1	10	ND	µg/Kg	R17471
Chlorobenzene	SW8260B	9/30/2008	10	1	10	ND	µg/Kg	R17471
Chloroform	SW8260B	9/30/2008	10	1	10	ND	µg/Kg	R17471
Chloromethane	SW8260B	9/30/2008	10	1	10	ND	µg/Kg	R17471
cis-1,2-Dichloroethene	SW8260B	9/30/2008	10	1	10	ND	µg/Kg	R17471
cis-1,3-Dichloropropene	SW8260B	9/30/2008	10	1	10	ND	µg/Kg	R17471
Dibromochloromethane	SW8260B	9/30/2008	10	1	10	ND	µg/Kg	R17471
Dibromomethane	SW8260B	9/30/2008	10	1	10	ND	µg/Kg	R17471
Dichlorodifluoromethane	SW8260B	9/30/2008	10	1	10	ND	µg/Kg	R17471
Ethyl tert-butyl ether (ETBE)	SW8260B	9/30/2008	10	1	10	ND	µg/Kg	R17471
Ethylbenzene	SW8260B	9/30/2008	10	1	10	ND	µg/Kg	R17471
Freon-113	SW8260B	9/30/2008	10	1	10	ND	µg/Kg	R17471
Hexachlorobutadiene	SW8260B	9/30/2008	10	1	10	ND	µg/Kg	R17471

These analyses were performed according to State of California Environmental Laboratory Accreditation program, Certificate # 1991

Report prepared for: Charlie Almestad
KLEINFELDER

Date Received: 9/25/2008
Date Reported: 10/3/2008

Client Sample ID: CompT-B(1A-1D)
Sample Location: CTO
Sample Matrix: SOIL
Date/Time Sampled 9/23/2008

Lab Sample ID: 0809187-031
Date Prepared: 9/29/2008

Parameters	Analysis Method	Date Analyzed	RL	Dilution Factor	MRL	Result	Units	Analytical Batch
Isopropyl Ether	SW8260B	9/30/2008	10	1	10	ND	µg/Kg	R17471
Isopropylbenzene	SW8260B	9/30/2008	10	1	10	ND	µg/Kg	R17471
Methyl tert-butyl ether (MTBE)	SW8260B	9/30/2008	10	1	10	ND	µg/Kg	R17471
Methylene chloride	SW8260B	9/30/2008	50	1	50	ND	µg/Kg	R17471
Naphthalene	SW8260B	9/30/2008	20	1	20	ND	µg/Kg	R17471
n-Butylbenzene	SW8260B	9/30/2008	10	1	10	ND	µg/Kg	R17471
n-Propylbenzene	SW8260B	9/30/2008	10	1	10	ND	µg/Kg	R17471
sec-Butylbenzene	SW8260B	9/30/2008	10	1	10	ND	µg/Kg	R17471
Styrene	SW8260B	9/30/2008	10	1	10	ND	µg/Kg	R17471
t-Butyl alcohol (t-Butanol)	SW8260B	9/30/2008	50	1	50	ND	µg/Kg	R17471
tert-Amyl methyl ether (TAME)	SW8260B	9/30/2008	10	1	10	ND	µg/Kg	R17471
tert-Butylbenzene	SW8260B	9/30/2008	10	1	10	ND	µg/Kg	R17471
Tetrachloroethene	SW8260B	9/30/2008	10	1	10	ND	µg/Kg	R17471
Toluene	SW8260B	9/30/2008	10	1	10	ND	µg/Kg	R17471
trans-1,2-Dichloroethene	SW8260B	9/30/2008	10	1	10	ND	µg/Kg	R17471
trans-1,3-Dichloropropene	SW8260B	9/30/2008	10	1	10	ND	µg/Kg	R17471
Trichloroethene	SW8260B	9/30/2008	10	1	10	ND	µg/Kg	R17471
Trichlorofluoromethane	SW8260B	9/30/2008	10	1	10	ND	µg/Kg	R17471
Vinyl chloride	SW8260B	9/30/2008	10	1	10	ND	µg/Kg	R17471
Xylenes, Total	SW8260B	9/30/2008	15	1	15	ND	µg/Kg	R17471
Surr: 4-Bromofluorobenzene	SW8260B	9/30/2008	0	1	55.8-141	111	%REC	R17471
Surr: Dibromofluoromethane	SW8260B	9/30/2008	0	1	59.8-148	112	%REC	R17471
Surr: Toluene-d8	SW8260B	9/30/2008	0	1	55.2-133	84.3	%REC	R17471

These analyses were performed according to State of California Environmental Laboratory Accreditation program, Certificate # 1991

Report prepared for: Charlie Almestad
KLEINFELDER

Date Received: 9/25/2008
Date Reported: 10/3/2008

Client Sample ID: CompT-B(1A-1D)
Sample Location: CTO
Sample Matrix: SOIL
Date/Time Sampled 9/23/2008

Lab Sample ID: 0809187-031
Date Prepared: 9/29/2008

Parameters	Analysis Method	Date Analyzed	RL	Dilution Factor	MRL	Result	Units	Analytical Batch
1,2,4-Trichlorobenzene	SW8270C	10/2/2008	0.33	1	0.330	ND	mg/Kg	R17469
1,2-Dichlorobenzene	SW8270C	10/2/2008	0.33	1	0.330	ND	mg/Kg	R17469
1,3-Dichlorobenzene	SW8270C	10/2/2008	0.33	1	0.330	ND	mg/Kg	R17469
1,4-Dichlorobenzene	SW8270C	10/2/2008	0.33	1	0.330	ND	mg/Kg	R17469
2,4,5-Trichlorophenol	SW8270C	10/2/2008	0.33	1	0.330	ND	mg/Kg	R17469
2,4,6-Trichlorophenol	SW8270C	10/2/2008	0.33	1	0.330	ND	mg/Kg	R17469
2,4-Dichlorophenol	SW8270C	10/2/2008	0.33	1	0.330	ND	mg/Kg	R17469
2,4-Dimethylphenol	SW8270C	10/2/2008	0.66	1	0.660	ND	mg/Kg	R17469
2,4-Dinitrophenol	SW8270C	10/2/2008	1.7	1	1.70	ND	mg/Kg	R17469
2,4-Dinitrotoluene	SW8270C	10/2/2008	0.33	1	0.330	ND	mg/Kg	R17469
2,6-Dinitrotoluene	SW8270C	10/2/2008	0.33	1	0.330	ND	mg/Kg	R17469
2-Chloronaphthalene	SW8270C	10/2/2008	0.33	1	0.330	ND	mg/Kg	R17469
2-Chlorophenol	SW8270C	10/2/2008	0.33	1	0.330	ND	mg/Kg	R17469
2-Methylnaphthalene	SW8270C	10/2/2008	0.33	1	0.330	ND	mg/Kg	R17469
2-Methylphenol	SW8270C	10/2/2008	0.33	1	0.330	ND	mg/Kg	R17469
2-Nitroaniline	SW8270C	10/2/2008	0.33	1	0.330	ND	mg/Kg	R17469
2-Nitrophenol	SW8270C	10/2/2008	0.66	1	0.660	ND	mg/Kg	R17469
3,3´-Dichlorobenzidine	SW8270C	10/2/2008	1.7	1	1.70	ND	mg/Kg	R17469
3-Methylphenol	SW8270C	10/2/2008	0.33	1	0.330	ND	mg/Kg	R17469
3-Nitroaniline	SW8270C	10/2/2008	0.33	1	0.330	ND	mg/Kg	R17469
4,6-Dinitro-2-methylphenol	SW8270C	10/2/2008	0.33	1	0.330	ND	mg/Kg	R17469
4-Bromophenyl phenyl ether	SW8270C	10/2/2008	0.33	1	0.330	ND	mg/Kg	R17469
4-Chloro-3-methylphenol	SW8270C	10/2/2008	0.33	1	0.330	ND	mg/Kg	R17469
4-Chloroaniline	SW8270C	10/2/2008	0.33	1	0.330	ND	mg/Kg	R17469
4-Chlorophenyl phenyl ether	SW8270C	10/2/2008	0.33	1	0.330	ND	mg/Kg	R17469
4-Methylphenol	SW8270C	10/2/2008	0.33	1	0.330	ND	mg/Kg	R17469
4-Nitroaniline	SW8270C	10/2/2008	0.33	1	0.330	ND	mg/Kg	R17469
4-Nitrophenol	SW8270C	10/2/2008	0.33	1	0.330	ND	mg/Kg	R17469
Acenaphthene	SW8270C	10/2/2008	0.33	1	0.330	ND	mg/Kg	R17469
Acenaphthylene	SW8270C	10/2/2008	0.33	1	0.330	ND	mg/Kg	R17469
Aniline	SW8270C	10/2/2008	0.33	1	0.330	ND	mg/Kg	R17469
Anthracene	SW8270C	10/2/2008	0.33	1	0.330	ND	mg/Kg	R17469
Benz(a)anthracene	SW8270C	10/2/2008	0.33	1	0.330	ND	mg/Kg	R17469
Benzidine	SW8270C	10/2/2008	3.3	1	3.30	ND	mg/Kg	R17469
Benzo(g,h,i)perylene	SW8270C	10/2/2008	0.33	1	0.330	ND	mg/Kg	R17469
Benzo[a]pyrene	SW8270C	10/2/2008	0.33	1	0.330	ND	mg/Kg	R17469
Benzo[b]fluoranthene	SW8270C	10/2/2008	0.33	1	0.330	ND	mg/Kg	R17469
Benzo[k]fluoranthene	SW8270C	10/2/2008	0.33	1	0.330	ND	mg/Kg	R17469
Benzoic acid	SW8270C	10/2/2008	6.66	1	6.66	ND	mg/Kg	R17469
Benzyl alcohol	SW8270C	10/2/2008	6.66	1	6.66	ND	mg/Kg	R17469
Bis(2-chloroethoxy)methane	SW8270C	10/2/2008	0.33	1	0.330	ND	mg/Kg	R17469
Bis(2-chloroethyl)ether	SW8270C	10/2/2008	0.33	1	0.330	ND	mg/Kg	R17469
Bis(2-chloroisopropyl)ether	SW8270C	10/2/2008	0.33	1	0.330	ND	mg/Kg	R17469

These analyses were performed according to State of California Environmental Laboratory Accreditation program, Certificate # 1991

Report prepared for: Charlie Almestad
KLEINFELDER

Date Received: 9/25/2008
Date Reported: 10/3/2008

Client Sample ID: CompT-B(1A-1D)
Sample Location: CTO
Sample Matrix: SOIL
Date/Time Sampled 9/23/2008

Lab Sample ID: 0809187-031
Date Prepared: 9/29/2008

Parameters	Analysis Method	Date Analyzed	RL	Dilution Factor	MRL	Result	Units	Analytical Batch
Bis(2-ethylhexyl)phthalate	SW8270C	10/2/2008	3.3	1	3.30	ND	mg/Kg	R17469
Butyl benzyl phthalate	SW8270C	10/2/2008	0.33	1	0.330	ND	mg/Kg	R17469
Chrysene	SW8270C	10/2/2008	0.66	1	0.660	ND	mg/Kg	R17469
Dibenz(a,h)anthracene	SW8270C	10/2/2008	0.33	1	0.330	ND	mg/Kg	R17469
Dibenzofuran	SW8270C	10/2/2008	0.33	1	0.330	ND	mg/Kg	R17469
Diethyl phthalate	SW8270C	10/2/2008	3.3	1	3.30	ND	mg/Kg	R17469
Dimethyl phthalate	SW8270C	10/2/2008	3.3	1	3.30	ND	mg/Kg	R17469
Di-n-butyl phthalate	SW8270C	10/2/2008	3.3	1	3.30	ND	mg/Kg	R17469
Di-n-octyl phthalate	SW8270C	10/2/2008	0.33	1	0.330	ND	mg/Kg	R17469
Fluoranthene	SW8270C	10/2/2008	0.33	1	0.330	ND	mg/Kg	R17469
Fluorene	SW8270C	10/2/2008	0.33	1	0.330	ND	mg/Kg	R17469
Hexachlorobenzene	SW8270C	10/2/2008	0.33	1	0.330	ND	mg/Kg	R17469
Hexachlorobutadiene	SW8270C	10/2/2008	0.33	1	0.330	ND	mg/Kg	R17469
Hexachlorocyclopentadiene	SW8270C	10/2/2008	0.33	1	0.330	ND	mg/Kg	R17469
Hexachloroethane	SW8270C	10/2/2008	0.33	1	0.330	ND	mg/Kg	R17469
Indeno(1,2,3-cd)pyrene	SW8270C	10/2/2008	0.33	1	0.330	ND	mg/Kg	R17469
Isophorone	SW8270C	10/2/2008	0.33	1	0.330	ND	mg/Kg	R17469
Naphthalene	SW8270C	10/2/2008	0.33	1	0.330	ND	mg/Kg	R17469
Nitrobenzene	SW8270C	10/2/2008	0.33	1	0.330	ND	mg/Kg	R17469
N-Nitrosodimethylamine	SW8270C	10/2/2008	0.33	1	0.330	ND	mg/Kg	R17469
N-Nitrosodi-n-propylamine	SW8270C	10/2/2008	0.33	1	0.330	ND	mg/Kg	R17469
N-Nitrosodiphenylamine	SW8270C	10/2/2008	0.33	1	0.330	ND	mg/Kg	R17469
Pentachlorophenol	SW8270C	10/2/2008	0.33	1	0.330	ND	mg/Kg	R17469
Phenanthrene	SW8270C	10/2/2008	0.33	1	0.330	ND	mg/Kg	R17469
Phenol	SW8270C	10/2/2008	0.33	1	0.330	ND	mg/Kg	R17469
Pyrene	SW8270C	10/2/2008	0.33	1	0.330	ND	mg/Kg	R17469
Surr: 2,4,6-Tribromophenol	SW8270C	10/2/2008	0	1	16.5-114	37.9	%REC	R17469
Surr: 2-Fluorobiphenyl	SW8270C	10/2/2008	0	1	24.1-85.6	34.0	%REC	R17469
Surr: 2-Fluorophenol	SW8270C	10/2/2008	0	1	30.3-76.6	45.6	%REC	R17469
Surr: Nitrobenzene-d5	SW8270C	10/2/2008	0	1	29.4-78.2	49.6	%REC	R17469
Surr: Phenol-d6	SW8270C	10/2/2008	0	1	28.7-84.7	38.1	%REC	R17469
Surr: p-Terphenyl-d14	SW8270C	10/2/2008	0	1	37.9-127	75.6	%REC	R17469

These analyses were performed according to State of California Environmental Laboratory Accreditation program, Certificate # 1991

Report prepared for: Charlie Almestad
KLEINFELDER

Date Received: 9/25/2008
Date Reported: 10/3/2008

Client Sample ID: CompT-D3(1A-1D)
Sample Location: CTO
Sample Matrix: SOIL
Date/Time Sampled 9/23/2008

Lab Sample ID: 0809187-032
Date Prepared: 9/29/2008

Parameters	Analysis Method	Date Analyzed	RL	Dilution Factor	MRL	Result	Units	Analytical Batch
Antimony	SW6010B	9/29/2008	5	1	5.0	ND	mg/Kg	4626
Arsenic	SW6010B	9/29/2008	1.7	1	1.7	ND	mg/Kg	4626
Barium	SW6010B	9/29/2008	5	1	5.0	46	mg/Kg	4626
Beryllium	SW6010B	9/29/2008	2	1	2.0	ND	mg/Kg	4626
Cadmium	SW6010B	9/29/2008	1	1	1.0	ND	mg/Kg	4626
Chromium	SW6010B	9/29/2008	5	1	5.0	34	mg/Kg	4626
Cobalt	SW6010B	9/29/2008	5	1	5.0	5.3	mg/Kg	4626
Copper	SW6010B	9/29/2008	5	1	5.0	5.2	mg/Kg	4626
Lead	SW6010B	9/29/2008	1	1	1.0	2.6	mg/Kg	4626
Molybdenum	SW6010B	9/29/2008	5	1	5.0	ND	mg/Kg	4626
Nickel	SW6010B	9/29/2008	5	1	5.0	26	mg/Kg	4626
Selenium	SW6010B	9/29/2008	5	1	5.0	ND	mg/Kg	4626
Silver	SW6010B	9/29/2008	1	1	1.0	ND	mg/Kg	4626
Thallium	SW6010B	9/29/2008	5	1	5.0	ND	mg/Kg	4626
Vanadium	SW6010B	9/29/2008	5	1	5.0	25	mg/Kg	4626
Zinc	SW6010B	9/29/2008	5	1	5.0	16	mg/Kg	4626
Mercury	SW7471A	9/30/2008	0.1	1	0.10	ND	mg/Kg	4632
TPH (Diesel)	SW8015B	9/30/2008	2	1	2.00	ND	mg/Kg	R17488
Surr: Pentacosane	SW8015B	9/30/2008	0	1	59.7-129	88.3	%REC	R17488
TPH (Gasoline)	SW8015B	10/3/2008	0.1	1	0.100	ND	mg/Kg	G17507
Surr: Trifluorotoluene	SW8015B	10/3/2008	0	1	65-135	94.9	%REC	G17507

These analyses were performed according to State of California Environmental Laboratory Accreditation program, Certificate # 1991

Report prepared for: Charlie Almestad
KLEINFELDER

Date Received: 9/25/2008
Date Reported: 10/3/2008

Client Sample ID: CompT-D3(1A-1D)
Sample Location: CTO
Sample Matrix: SOIL
Date/Time Sampled 9/23/2008

Lab Sample ID: 0809187-032
Date Prepared: 9/29/2008

Parameters	Analysis Method	Date Analyzed	RL	Dilution Factor	MRL	Result	Units	Analytical Batch
1,1,1,2-Tetrachloroethane	SW8260B	9/30/2008	10	1	10	ND	µg/Kg	R17471
1,1,1-Trichloroethane	SW8260B	9/30/2008	10	1	10	ND	µg/Kg	R17471
1,1,2,2-Tetrachloroethane	SW8260B	9/30/2008	10	1	10	ND	µg/Kg	R17471
1,1,2-Trichloroethane	SW8260B	9/30/2008	10	1	10	ND	µg/Kg	R17471
1,1-Dichloroethane	SW8260B	9/30/2008	10	1	10	ND	µg/Kg	R17471
1,1-Dichloroethene	SW8260B	9/30/2008	10	1	10	ND	µg/Kg	R17471
1,1-Dichloropropene	SW8260B	9/30/2008	10	1	10	ND	µg/Kg	R17471
1,2,3-Trichlorobenzene	SW8260B	9/30/2008	10	1	10	ND	µg/Kg	R17471
1,2,3-Trichloropropane	SW8260B	9/30/2008	10	1	10	ND	µg/Kg	R17471
1,2,4-Trichlorobenzene	SW8260B	9/30/2008	10	1	10	ND	µg/Kg	R17471
1,2,4-Trimethylbenzene	SW8260B	9/30/2008	10	1	10	ND	µg/Kg	R17471
1,2-Dibromo-3-chloropropane	SW8260B	9/30/2008	10	1	10	ND	µg/Kg	R17471
1,2-Dibromoethane (EDB)	SW8260B	9/30/2008	10	1	10	ND	µg/Kg	R17471
1,2-Dichlorobenzene	SW8260B	9/30/2008	10	1	10	ND	µg/Kg	R17471
1,2-Dichloroethane (EDC)	SW8260B	9/30/2008	10	1	10	ND	µg/Kg	R17471
1,2-Dichloropropane	SW8260B	9/30/2008	10	1	10	ND	µg/Kg	R17471
1,3,5-Trimethylbenzene	SW8260B	9/30/2008	10	1	10	ND	µg/Kg	R17471
1,3-Dichlorobenzene	SW8260B	9/30/2008	10	1	10	ND	µg/Kg	R17471
1,4-Dichlorobenzene	SW8260B	9/30/2008	10	1	10	ND	µg/Kg	R17471
2,2-Dichloropropane	SW8260B	9/30/2008	10	1	10	ND	µg/Kg	R17471
2-Chloroethyl vinyl ether	SW8260B	9/30/2008	10	1	10	ND	µg/Kg	R17471
2-Chlorotoluene	SW8260B	9/30/2008	10	1	10	ND	µg/Kg	R17471
4-Chlorotoluene	SW8260B	9/30/2008	10	1	10	ND	µg/Kg	R17471
4-Isopropyltoluene	SW8260B	9/30/2008	10	1	10	ND	µg/Kg	R17471
Benzene	SW8260B	9/30/2008	10	1	10	ND	µg/Kg	R17471
Bromobenzene	SW8260B	9/30/2008	10	1	10	ND	µg/Kg	R17471
Bromochloromethane	SW8260B	9/30/2008	10	1	10	ND	µg/Kg	R17471
Bromodichloromethane	SW8260B	9/30/2008	10	1	10	ND	µg/Kg	R17471
Bromoform	SW8260B	9/30/2008	10	1	10	ND	µg/Kg	R17471
Bromomethane	SW8260B	9/30/2008	10	1	10	ND	µg/Kg	R17471
Carbon tetrachloride	SW8260B	9/30/2008	10	1	10	ND	µg/Kg	R17471
Chlorobenzene	SW8260B	9/30/2008	10	1	10	ND	µg/Kg	R17471
Chloroform	SW8260B	9/30/2008	10	1	10	ND	µg/Kg	R17471
Chloromethane	SW8260B	9/30/2008	10	1	10	ND	µg/Kg	R17471
cis-1,2-Dichloroethene	SW8260B	9/30/2008	10	1	10	ND	µg/Kg	R17471
cis-1,3-Dichloropropene	SW8260B	9/30/2008	10	1	10	ND	µg/Kg	R17471
Dibromochloromethane	SW8260B	9/30/2008	10	1	10	ND	µg/Kg	R17471
Dibromomethane	SW8260B	9/30/2008	10	1	10	ND	µg/Kg	R17471
Dichlorodifluoromethane	SW8260B	9/30/2008	10	1	10	ND	µg/Kg	R17471
Ethyl tert-butyl ether (ETBE)	SW8260B	9/30/2008	10	1	10	ND	µg/Kg	R17471
Ethylbenzene	SW8260B	9/30/2008	10	1	10	ND	µg/Kg	R17471
Freon-113	SW8260B	9/30/2008	10	1	10	ND	µg/Kg	R17471
Hexachlorobutadiene	SW8260B	9/30/2008	10	1	10	ND	µg/Kg	R17471

These analyses were performed according to State of California Environmental Laboratory Accreditation program, Certificate # 1991

Report prepared for: Charlie Almestad
KLEINFELDER

Date Received: 9/25/2008
Date Reported: 10/3/2008

Client Sample ID: CompT-D3(1A-1D)
Sample Location: CTO
Sample Matrix: SOIL
Date/Time Sampled 9/23/2008

Lab Sample ID: 0809187-032
Date Prepared: 9/29/2008

Parameters	Analysis Method	Date Analyzed	RL	Dilution Factor	MRL	Result	Units	Analytical Batch
Isopropyl Ether	SW8260B	9/30/2008	10	1	10	ND	µg/Kg	R17471
Isopropylbenzene	SW8260B	9/30/2008	10	1	10	ND	µg/Kg	R17471
Methyl tert-butyl ether (MTBE)	SW8260B	9/30/2008	10	1	10	ND	µg/Kg	R17471
Methylene chloride	SW8260B	9/30/2008	50	1	50	ND	µg/Kg	R17471
Naphthalene	SW8260B	9/30/2008	20	1	20	ND	µg/Kg	R17471
n-Butylbenzene	SW8260B	9/30/2008	10	1	10	ND	µg/Kg	R17471
n-Propylbenzene	SW8260B	9/30/2008	10	1	10	ND	µg/Kg	R17471
sec-Butylbenzene	SW8260B	9/30/2008	10	1	10	ND	µg/Kg	R17471
Styrene	SW8260B	9/30/2008	10	1	10	ND	µg/Kg	R17471
t-Butyl alcohol (t-Butanol)	SW8260B	9/30/2008	50	1	50	ND	µg/Kg	R17471
tert-Amyl methyl ether (TAME)	SW8260B	9/30/2008	10	1	10	ND	µg/Kg	R17471
tert-Butylbenzene	SW8260B	9/30/2008	10	1	10	ND	µg/Kg	R17471
Tetrachloroethene	SW8260B	9/30/2008	10	1	10	ND	µg/Kg	R17471
Toluene	SW8260B	9/30/2008	10	1	10	ND	µg/Kg	R17471
trans-1,2-Dichloroethene	SW8260B	9/30/2008	10	1	10	ND	µg/Kg	R17471
trans-1,3-Dichloropropene	SW8260B	9/30/2008	10	1	10	ND	µg/Kg	R17471
Trichloroethene	SW8260B	9/30/2008	10	1	10	ND	µg/Kg	R17471
Trichlorofluoromethane	SW8260B	9/30/2008	10	1	10	ND	µg/Kg	R17471
Vinyl chloride	SW8260B	9/30/2008	10	1	10	ND	µg/Kg	R17471
Xylenes, Total	SW8260B	9/30/2008	15	1	15	ND	µg/Kg	R17471
Surr: 4-Bromofluorobenzene	SW8260B	9/30/2008	0	1	55.8-141	111	%REC	R17471
Surr: Dibromofluoromethane	SW8260B	9/30/2008	0	1	59.8-148	99.9	%REC	R17471
Surr: Toluene-d8	SW8260B	9/30/2008	0	1	55.2-133	86.7	%REC	R17471

These analyses were performed according to State of California Environmental Laboratory Accreditation program, Certificate # 1991

Report prepared for: Charlie Almestad
KLEINFELDER

Date Received: 9/25/2008
Date Reported: 10/3/2008

Client Sample ID: CompT-D3(1A-1D)
Sample Location: CTO
Sample Matrix: SOIL
Date/Time Sampled 9/23/2008

Lab Sample ID: 0809187-032
Date Prepared: 9/29/2008

Parameters	Analysis Method	Date Analyzed	RL	Dilution Factor	MRL	Result	Units	Analytical Batch
1,2,4-Trichlorobenzene	SW8270C	10/2/2008	0.33	1	0.330	ND	mg/Kg	R17469
1,2-Dichlorobenzene	SW8270C	10/2/2008	0.33	1	0.330	ND	mg/Kg	R17469
1,3-Dichlorobenzene	SW8270C	10/2/2008	0.33	1	0.330	ND	mg/Kg	R17469
1,4-Dichlorobenzene	SW8270C	10/2/2008	0.33	1	0.330	ND	mg/Kg	R17469
2,4,5-Trichlorophenol	SW8270C	10/2/2008	0.33	1	0.330	ND	mg/Kg	R17469
2,4,6-Trichlorophenol	SW8270C	10/2/2008	0.33	1	0.330	ND	mg/Kg	R17469
2,4-Dichlorophenol	SW8270C	10/2/2008	0.33	1	0.330	ND	mg/Kg	R17469
2,4-Dimethylphenol	SW8270C	10/2/2008	0.66	1	0.660	ND	mg/Kg	R17469
2,4-Dinitrophenol	SW8270C	10/2/2008	1.7	1	1.70	ND	mg/Kg	R17469
2,4-Dinitrotoluene	SW8270C	10/2/2008	0.33	1	0.330	ND	mg/Kg	R17469
2,6-Dinitrotoluene	SW8270C	10/2/2008	0.33	1	0.330	ND	mg/Kg	R17469
2-Chloronaphthalene	SW8270C	10/2/2008	0.33	1	0.330	ND	mg/Kg	R17469
2-Chlorophenol	SW8270C	10/2/2008	0.33	1	0.330	ND	mg/Kg	R17469
2-Methylnaphthalene	SW8270C	10/2/2008	0.33	1	0.330	ND	mg/Kg	R17469
2-Methylphenol	SW8270C	10/2/2008	0.33	1	0.330	ND	mg/Kg	R17469
2-Nitroaniline	SW8270C	10/2/2008	0.33	1	0.330	ND	mg/Kg	R17469
2-Nitrophenol	SW8270C	10/2/2008	0.66	1	0.660	ND	mg/Kg	R17469
3,3´-Dichlorobenzidine	SW8270C	10/2/2008	1.7	1	1.70	ND	mg/Kg	R17469
3-Methylphenol	SW8270C	10/2/2008	0.33	1	0.330	ND	mg/Kg	R17469
3-Nitroaniline	SW8270C	10/2/2008	0.33	1	0.330	ND	mg/Kg	R17469
4,6-Dinitro-2-methylphenol	SW8270C	10/2/2008	0.33	1	0.330	ND	mg/Kg	R17469
4-Bromophenyl phenyl ether	SW8270C	10/2/2008	0.33	1	0.330	ND	mg/Kg	R17469
4-Chloro-3-methylphenol	SW8270C	10/2/2008	0.33	1	0.330	ND	mg/Kg	R17469
4-Chloroaniline	SW8270C	10/2/2008	0.33	1	0.330	ND	mg/Kg	R17469
4-Chlorophenyl phenyl ether	SW8270C	10/2/2008	0.33	1	0.330	ND	mg/Kg	R17469
4-Methylphenol	SW8270C	10/2/2008	0.33	1	0.330	ND	mg/Kg	R17469
4-Nitroaniline	SW8270C	10/2/2008	0.33	1	0.330	ND	mg/Kg	R17469
4-Nitrophenol	SW8270C	10/2/2008	0.33	1	0.330	ND	mg/Kg	R17469
Acenaphthene	SW8270C	10/2/2008	0.33	1	0.330	ND	mg/Kg	R17469
Acenaphthylene	SW8270C	10/2/2008	0.33	1	0.330	ND	mg/Kg	R17469
Aniline	SW8270C	10/2/2008	0.33	1	0.330	ND	mg/Kg	R17469
Anthracene	SW8270C	10/2/2008	0.33	1	0.330	ND	mg/Kg	R17469
Benz(a)anthracene	SW8270C	10/2/2008	0.33	1	0.330	ND	mg/Kg	R17469
Benzidine	SW8270C	10/2/2008	3.3	1	3.30	ND	mg/Kg	R17469
Benzo(g,h,i)perylene	SW8270C	10/2/2008	0.33	1	0.330	ND	mg/Kg	R17469
Benzo[a]pyrene	SW8270C	10/2/2008	0.33	1	0.330	ND	mg/Kg	R17469
Benzo[b]fluoranthene	SW8270C	10/2/2008	0.33	1	0.330	ND	mg/Kg	R17469
Benzo[k]fluoranthene	SW8270C	10/2/2008	0.33	1	0.330	ND	mg/Kg	R17469
Benzoic acid	SW8270C	10/2/2008	6.66	1	6.66	ND	mg/Kg	R17469
Benzyl alcohol	SW8270C	10/2/2008	6.66	1	6.66	ND	mg/Kg	R17469
Bis(2-chloroethoxy)methane	SW8270C	10/2/2008	0.33	1	0.330	ND	mg/Kg	R17469
Bis(2-chloroethyl)ether	SW8270C	10/2/2008	0.33	1	0.330	ND	mg/Kg	R17469
Bis(2-chloroisopropyl)ether	SW8270C	10/2/2008	0.33	1	0.330	ND	mg/Kg	R17469

These analyses were performed according to State of California Environmental Laboratory Accreditation program, Certificate # 1991

Report prepared for: Charlie Almestad
KLEINFELDER

Date Received: 9/25/2008
Date Reported: 10/3/2008

Client Sample ID: CompT-D3(1A-1D)
Sample Location: CTO
Sample Matrix: SOIL
Date/Time Sampled 9/23/2008

Lab Sample ID: 0809187-032
Date Prepared: 9/29/2008

Parameters	Analysis Method	Date Analyzed	RL	Dilution Factor	MRL	Result	Units	Analytical Batch
Bis(2-ethylhexyl)phthalate	SW8270C	10/2/2008	3.3	1	3.30	ND	mg/Kg	R17469
Butyl benzyl phthalate	SW8270C	10/2/2008	0.33	1	0.330	ND	mg/Kg	R17469
Chrysene	SW8270C	10/2/2008	0.66	1	0.660	ND	mg/Kg	R17469
Dibenz(a,h)anthracene	SW8270C	10/2/2008	0.33	1	0.330	ND	mg/Kg	R17469
Dibenzofuran	SW8270C	10/2/2008	0.33	1	0.330	ND	mg/Kg	R17469
Diethyl phthalate	SW8270C	10/2/2008	3.3	1	3.30	ND	mg/Kg	R17469
Dimethyl phthalate	SW8270C	10/2/2008	3.3	1	3.30	ND	mg/Kg	R17469
Di-n-butyl phthalate	SW8270C	10/2/2008	3.3	1	3.30	ND	mg/Kg	R17469
Di-n-octyl phthalate	SW8270C	10/2/2008	0.33	1	0.330	ND	mg/Kg	R17469
Fluoranthene	SW8270C	10/2/2008	0.33	1	0.330	ND	mg/Kg	R17469
Fluorene	SW8270C	10/2/2008	0.33	1	0.330	ND	mg/Kg	R17469
Hexachlorobenzene	SW8270C	10/2/2008	0.33	1	0.330	ND	mg/Kg	R17469
Hexachlorobutadiene	SW8270C	10/2/2008	0.33	1	0.330	ND	mg/Kg	R17469
Hexachlorocyclopentadiene	SW8270C	10/2/2008	0.33	1	0.330	ND	mg/Kg	R17469
Hexachloroethane	SW8270C	10/2/2008	0.33	1	0.330	ND	mg/Kg	R17469
Indeno(1,2,3-cd)pyrene	SW8270C	10/2/2008	0.33	1	0.330	ND	mg/Kg	R17469
Isophorone	SW8270C	10/2/2008	0.33	1	0.330	ND	mg/Kg	R17469
Naphthalene	SW8270C	10/2/2008	0.33	1	0.330	ND	mg/Kg	R17469
Nitrobenzene	SW8270C	10/2/2008	0.33	1	0.330	ND	mg/Kg	R17469
N-Nitrosodimethylamine	SW8270C	10/2/2008	0.33	1	0.330	ND	mg/Kg	R17469
N-Nitrosodi-n-propylamine	SW8270C	10/2/2008	0.33	1	0.330	ND	mg/Kg	R17469
N-Nitrosodiphenylamine	SW8270C	10/2/2008	0.33	1	0.330	ND	mg/Kg	R17469
Pentachlorophenol	SW8270C	10/2/2008	0.33	1	0.330	ND	mg/Kg	R17469
Phenanthrene	SW8270C	10/2/2008	0.33	1	0.330	ND	mg/Kg	R17469
Phenol	SW8270C	10/2/2008	0.33	1	0.330	ND	mg/Kg	R17469
Pyrene	SW8270C	10/2/2008	0.33	1	0.330	ND	mg/Kg	R17469
Surr: 2,4,6-Tribromophenol	SW8270C	10/2/2008	0	1	16.5-114	41.1	%REC	R17469
Surr: 2-Fluorobiphenyl	SW8270C	10/2/2008	0	1	24.1-85.6	33.1	%REC	R17469
Surr: 2-Fluorophenol	SW8270C	10/2/2008	0	1	30.3-76.6	44.4	%REC	R17469
Surr: Nitrobenzene-d5	SW8270C	10/2/2008	0	1	29.4-78.2	49.2	%REC	R17469
Surr: Phenol-d6	SW8270C	10/2/2008	0	1	28.7-84.7	36.3	%REC	R17469
Surr: p-Terphenyl-d14	SW8270C	10/2/2008	0	1	37.9-127	75.1	%REC	R17469

These analyses were performed according to State of California Environmental Laboratory Accreditation program, Certificate # 1991

Definitions, legends and Notes

Note	Description
ug/kg	Microgram per kilogram (ppb, part per billion).
ug/L	Microgram per liter (ppb, part per billion).
mg/kg	Milligram per kilogram (ppm, part per million).
mg/L	Milligram per liter (ppm, part per million).
LCS/LCSD	Laboratory control sample/laboratory control sample duplicate.
MDL	Method detection limit.
MRL	Modified reporting limit. When sample is subject to dilution, reporting limit times dilution factor yields MRL.
MS/MSD	Matrix spike/matrix spike duplicate.
N/A	Not applicable.
ND	Not detected at or above detection limit.
NR	Not reported.
QC	Quality Control.
RL	Reporting limit.
% RPD	Percent relative difference.
a	pH was measured immediately upon the receipt of the sample, but it was still done outside the holding time.
sub	Analyzed by subcontracting laboratory, Lab Certificate #

These analyses were performed according to State of California Environmental Laboratory Accreditation program, Certificate # 1991

Torrent Laboratory, Inc.

Date: *03-Oct-08*

CLIENT: KLEINFELDER
Work Order: 0809187
Project: 95539

ANALYTICAL QC SUMMARY REPORT

BatchID: 4626

Sample ID **MB-4626** SampType: **MBLK** TestCode: **6010B_S** Units: **mg/Kg** Prep Date: **9/29/2008** RunNo: **17452**
Client ID: **ZZZZZ** Batch ID: **4626** TestNo: **SW6010B** **(SW3050B)** Analysis Date: **9/29/2008** SeqNo: **249955**

Analyte	Result	PQL	SPK value	SPK Ref Val	%REC	LowLimit	HighLimit	RPD Ref Val	%RPD	RPDLimit	Qual
Antimony	ND	5.0									
Arsenic	ND	1.7									
Barium	ND	5.0									
Beryllium	ND	2.0									
Cadmium	ND	1.0									
Chromium	ND	5.0									
Cobalt	ND	5.0									
Copper	ND	5.0									
Lead	ND	1.0									
Molybdenum	ND	5.0									
Nickel	ND	5.0									
Selenium	ND	5.0									
Silver	ND	1.0									
Thallium	ND	5.0									
Vanadium	ND	5.0									
Zinc	ND	5.0									

Sample ID **LCS-4626** SampType: **LCS** TestCode: **6010B_S** Units: **mg/Kg** Prep Date: **9/29/2008** RunNo: **17452**
Client ID: **ZZZZZ** Batch ID: **4626** TestNo: **SW6010B** **(SW3050B)** Analysis Date: **9/29/2008** SeqNo: **249953**

Analyte	Result	PQL	SPK value	SPK Ref Val	%REC	LowLimit	HighLimit	RPD Ref Val	%RPD	RPDLimit	Qual
Antimony	46.90	5.0	50	0.2	93.4	30.7	130				
Arsenic	47.95	1.7	50	0	95.9	71	121				
Barium	47.55	5.0	50	0.9	93.3	70.2	130				
Beryllium	46.25	2.0	50	0	92.5	73.3	115				
Cadmium	44.85	1.0	50	0	89.7	68.7	110				
Chromium	47.35	5.0	50	0.15	94.4	76	116				
Cobalt	45.65	5.0	50	0	91.3	57.4	122				
Copper	47.25	5.0	50	0.1	94.3	74.8	119				

Qualifiers:
E Value above quantitation range
ND Not Detected at the Reporting Limit
H Holding times for preparation or analysis exceeded
R RPD outside accepted recovery limits
J Analyte detected below quantitation limits
S Spike Recovery outside accepted recovery limits

CLIENT: KLEINFELDER
Work Order: 0809187
Project: 95539

ANALYTICAL QC SUMMARY REPORT

BatchID: 4626

Sample ID **LCS-4626** SampType: **LCS** TestCode: **6010B_S** Units: **mg/Kg** Prep Date: **9/29/2008** RunNo: **17452**
Client ID: **ZZZZZ** Batch ID: **4626** TestNo: **SW6010B** **(SW3050B)** Analysis Date: **9/29/2008** SeqNo: **249953**

Analyte	Result	PQL	SPK value	SPK Ref Val	%REC	LowLimit	HighLimit	RPD Ref Val	%RPD	RPDLimit	Qual
Lead	46.40	1.0	50	0.15	92.5	67.9	118				
Molybdenum	47.85	5.0	50	0	95.7	62.9	123				
Nickel	45.55	5.0	50	0.1	90.9	61.5	122				
Selenium	41.85	5.0	50	0	83.7	62	111				
Silver	45.20	1.0	50	0	90.4	81.1	109				
Thallium	45.10	5.0	50	0	90.2	39.2	125				
Vanadium	47.70	5.0	50	0	95.4	65.8	122				
Zinc	44.30	5.0	50	0	88.6	59.9	122				

Sample ID **LCSD-4626** SampType: **LCSD** TestCode: **6010B_S** Units: **mg/Kg** Prep Date: **9/29/2008** RunNo: **17452**
Client ID: **ZZZZZ** Batch ID: **4626** TestNo: **SW6010B** **(SW3050B)** Analysis Date: **9/29/2008** SeqNo: **249954**

Analyte	Result	PQL	SPK value	SPK Ref Val	%REC	LowLimit	HighLimit	RPD Ref Val	%RPD	RPDLimit	Qual
Antimony	47.30	5.0	50	0.2	94.2	30.7	130	46.9	0.849	30	
Arsenic	48.35	1.7	50	0	96.7	71	121	47.95	0.831	30	
Barium	48.85	5.0	50	0.9	95.9	70.2	130	47.55	2.70	30	
Beryllium	46.35	2.0	50	0	92.7	73.3	115	46.25	0.216	30	
Cadmium	46.40	1.0	50	0	92.8	68.7	110	44.85	3.40	30	
Chromium	48.90	5.0	50	0.15	97.5	76	116	47.35	3.22	30	
Cobalt	47.60	5.0	50	0	95.2	57.4	122	45.65	4.18	30	
Copper	49.05	5.0	50	0.1	97.9	74.8	119	47.25	3.74	30	
Lead	46.65	1.0	50	0.15	93.0	67.9	118	46.4	0.537	30	
Molybdenum	47.95	5.0	50	0	95.9	62.9	123	47.85	0.209	30	
Nickel	47.50	5.0	50	0.1	94.8	61.5	122	45.55	4.19	30	
Selenium	41.75	5.0	50	0	83.5	62	111	41.85	0.239	30	
Silver	46.40	1.0	50	0	92.8	81.1	109	45.2	2.62	30	
Thallium	45.70	5.0	50	0	91.4	39.2	125	45.1	1.32	30	
Vanadium	49.15	5.0	50	0	98.3	65.8	122	47.7	2.99	30	
Zinc	46.05	5.0	50	0	92.1	59.9	122	44.3	3.87	30	

Qualifiers:
E Value above quantitation range
ND Not Detected at the Reporting Limit
H Holding times for preparation or analysis exceeded
R RPD outside accepted recovery limits
J Analyte detected below quantitation limits
S Spike Recovery outside accepted recovery limits

CLIENT: KLEINFELDER
Work Order: 0809187
Project: 95539

ANALYTICAL QC SUMMARY REPORT

BatchID: 4626

Sample ID **0809187-001AMS** SampType: **MS** TestCode: **6010B_S** Units: **mg/Kg** Prep Date: **9/29/2008** RunNo: **17452**
Client ID: **T-E2-1-8** Batch ID: **4626** TestNo: **SW6010B (SW3050B)** Analysis Date: **9/29/2008** SeqNo: **249935**

Analyte	Result	PQL	SPK value	SPK Ref Val	%REC	LowLimit	HighLimit	RPD Ref Val	%RPD	RPDLimit	Qual
Antimony	28.70	5.0	50	1.95	53.5	30.7	130				
Arsenic	46.85	1.7	50	1.6	90.5	71	121				
Barium	104.0	5.0	50	61.75	84.5	56.2	127				
Beryllium	44.45	2.0	50	0	88.9	73.3	115				
Cadmium	44.00	1.0	50	0	88.0	68.7	110				
Chromium	82.70	5.0	50	34.25	96.9	76	116				
Cobalt	48.85	5.0	50	5.95	85.8	57.4	122				
Copper	54.45	5.0	50	6.95	95.0	74.8	119				
Lead	48.50	1.0	50	4.15	88.7	60.5	113				
Molybdenum	44.10	5.0	50	0	88.2	62.9	123				
Nickel	75.20	5.0	50	30.9	88.6	61.5	122				
Selenium	39.80	5.0	50	0	79.6	62	111				
Silver	45.15	1.0	50	1.1	88.1	81.1	109				
Thallium	38.95	5.0	50	0	77.9	39.2	125				
Vanadium	72.35	5.0	50	26.6	91.5	65.8	122				
Zinc	62.00	5.0	50	19.45	85.1	59.9	122				

Sample ID **0809187-001AMSD** SampType: **MSD** TestCode: **6010B_S** Units: **mg/Kg** Prep Date: **9/29/2008** RunNo: **17452**
Client ID: **T-E2-1-8** Batch ID: **4626** TestNo: **SW6010B (SW3050B)** Analysis Date: **9/29/2008** SeqNo: **249936**

Analyte	Result	PQL	SPK value	SPK Ref Val	%REC	LowLimit	HighLimit	RPD Ref Val	%RPD	RPDLimit	Qual
Antimony	29.15	5.0	50	1.95	54.4	30.7	130	28.7	1.56	30	
Arsenic	46.65	1.7	50	1.6	90.1	71	121	46.85	0.428	30	
Barium	106.0	5.0	50	61.75	88.4	56.2	127	104	1.86	30	
Beryllium	45.05	2.0	50	0	90.1	73.3	115	44.45	1.34	30	
Cadmium	46.10	1.0	50	0	92.2	68.7	110	44	4.66	30	
Chromium	85.40	5.0	50	34.25	102	76	116	82.7	3.21	30	
Cobalt	51.15	5.0	50	5.95	90.4	57.4	122	48.85	4.60	30	
Copper	56.70	5.0	50	6.95	99.5	74.8	119	54.45	4.05	30	
Lead	47.65	1.0	50	4.15	87.0	60.5	113	48.5	1.77	30	
Molybdenum	43.75	5.0	50	0	87.5	62.9	123	44.1	0.797	30	

Qualifiers:
E Value above quantitation range
ND Not Detected at the Reporting Limit
H Holding times for preparation or analysis exceeded
R RPD outside accepted recovery limits
J Analyte detected below quantitation limits
S Spike Recovery outside accepted recovery limits

CLIENT: KLEINFELDER
Work Order: 0809187
Project: 95539

ANALYTICAL QC SUMMARY REPORT

BatchID: 4626

Sample ID	0809187-001AMSD	SampType:	MSD	TestCode:	6010B_S	Units:	mg/Kg	Prep Date:	9/29/2008	RunNo:	17452
Client ID:	T-E2-1-8	Batch ID:	4626	TestNo:	SW6010B	(SW3050B)		Analysis Date:	9/29/2008	SeqNo:	249936

Analyte	Result	PQL	SPK value	SPK Ref Val	%REC	LowLimit	HighLimit	RPD Ref Val	%RPD	RPDLimit	Qual
Nickel	77.40	5.0	50	30.9	93.0	61.5	122	75.2	2.88	30	
Selenium	40.30	5.0	50	0	80.6	62	111	39.8	1.25	30	
Silver	47.10	1.0	50	1.1	92.0	81.1	109	45.15	4.23	30	
Thallium	39.00	5.0	50	0	78.0	39.2	125	38.95	0.128	30	
Vanadium	74.15	5.0	50	26.6	95.1	65.8	122	72.35	2.46	30	
Zinc	63.85	5.0	50	19.45	88.8	59.9	122	62	2.94	30	

Qualifiers:

E	Value above quantitation range	H	Holding times for preparation or analysis exceeded	J	Analyte detected below quantitation limits
ND	Not Detected at the Reporting Limit	R	RPD outside accepted recovery limits	S	Spike Recovery outside accepted recovery limits

CLIENT: KLEINFELDER
Work Order: 0809187
Project: 95539

ANALYTICAL QC SUMMARY REPORT

BatchID: 4632

Sample ID	MB-4632	SampType:	MBLK	TestCode:	HG_CTS	Units:	mg/Kg	Prep Date:	9/29/2008	RunNo:	17472
Client ID:	ZZZZZ	Batch ID:	4632	TestNo:	SW7471A	(SW7471APR		Analysis Date:	9/30/2008	SeqNo:	250270

Analyte	Result	PQL	SPK value	SPK Ref Val	%REC	LowLimit	HighLimit	RPD Ref Val	%RPD	RPDLimit	Qual
Mercury	ND	0.10									

Sample ID	LCS-4632	SampType:	LCS	TestCode:	HG_CTS	Units:	mg/Kg	Prep Date:	9/29/2008	RunNo:	17472
Client ID:	ZZZZZ	Batch ID:	4632	TestNo:	SW7471A	(SW7471APR		Analysis Date:	9/30/2008	SeqNo:	250268

Analyte	Result	PQL	SPK value	SPK Ref Val	%REC	LowLimit	HighLimit	RPD Ref Val	%RPD	RPDLimit	Qual
Mercury	1.298	0.10	1.25	0	104	80.5	133				

Sample ID	LCSD-4632	SampType:	LCSD	TestCode:	HG_CTS	Units:	mg/Kg	Prep Date:	9/29/2008	RunNo:	17472
Client ID:	ZZZZZ	Batch ID:	4632	TestNo:	SW7471A	(SW7471APR		Analysis Date:	9/30/2008	SeqNo:	250269

Analyte	Result	PQL	SPK value	SPK Ref Val	%REC	LowLimit	HighLimit	RPD Ref Val	%RPD	RPDLimit	Qual
Mercury	1.231	0.10	1.25	0	98.5	80.5	133	1.298	5.27	30	

Sample ID	0809187-001AMS	SampType:	MS	TestCode:	HG_CTS	Units:	mg/Kg	Prep Date:	9/29/2008	RunNo:	17472
Client ID:	T-E2-1-8	Batch ID:	4632	TestNo:	SW7471A	(SW7471APR		Analysis Date:	9/30/2008	SeqNo:	250250

Analyte	Result	PQL	SPK value	SPK Ref Val	%REC	LowLimit	HighLimit	RPD Ref Val	%RPD	RPDLimit	Qual
Mercury	1.301	0.10	1.25	0	104	80.5	133				

Sample ID	0809187-001AMSD	SampType:	MSD	TestCode:	HG_CTS	Units:	mg/Kg	Prep Date:	9/29/2008	RunNo:	17472
Client ID:	T-E2-1-8	Batch ID:	4632	TestNo:	SW7471A	(SW7471APR		Analysis Date:	9/30/2008	SeqNo:	250251

Analyte	Result	PQL	SPK value	SPK Ref Val	%REC	LowLimit	HighLimit	RPD Ref Val	%RPD	RPDLimit	Qual
Mercury	1.255	0.10	1.25	0	100	80.5	133	1.301	3.59	30	

Qualifiers:

E	Value above quantitation range	H	Holding times for preparation or analysis exceeded	J	Analyte detected below quantitation limits
ND	Not Detected at the Reporting Limit	R	RPD outside accepted recovery limits	S	Spike Recovery outside accepted recovery limits

CLIENT: KLEINFELDER
Work Order: 0809187
Project: 95539

ANALYTICAL QC SUMMARY REPORT

BatchID: G17507

Sample ID	MB_G17507	SampType:	MBLK	TestCode:	TPHGAS_S	Units:	mg/Kg	Prep Date:	10/2/2008	RunNo:	17507
Client ID:	ZZZZZ	Batch ID:	G17507	TestNo:	SW8015B			Analysis Date:	10/3/2008	SeqNo:	250786

Analyte	Result	PQL	SPK value	SPK Ref Val	%REC	LowLimit	HighLimit	RPD Ref Val	%RPD	RPDLimit	Qual
TPH (Gasoline)	ND	0.100									
Surr: Trifluorotoluene	0.2043	0	0.2	0	102	65	135				

Sample ID	LCS_G17507	SampType:	LCS	TestCode:	TPHGAS_S	Units:	mg/Kg	Prep Date:	10/2/2008	RunNo:	17507
Client ID:	ZZZZZ	Batch ID:	G17507	TestNo:	SW8015B			Analysis Date:	10/3/2008	SeqNo:	250787

Analyte	Result	PQL	SPK value	SPK Ref Val	%REC	LowLimit	HighLimit	RPD Ref Val	%RPD	RPDLimit	Qual
TPH (Gasoline)	0.9925	0.100	1	0	99.2	65	135				
Surr: Trifluorotoluene	0.2249	0	0.2	0	112	65	135				

Sample ID	LCSD_G17507	SampType:	LCSD	TestCode:	TPHGAS_S	Units:	mg/Kg	Prep Date:	10/2/2008	RunNo:	17507
Client ID:	ZZZZZ	Batch ID:	G17507	TestNo:	SW8015B			Analysis Date:	10/3/2008	SeqNo:	250788

Analyte	Result	PQL	SPK value	SPK Ref Val	%REC	LowLimit	HighLimit	RPD Ref Val	%RPD	RPDLimit	Qual
TPH (Gasoline)	0.9190	0.100	1	0	91.9	65	135	0.9925	7.69	30	
Surr: Trifluorotoluene	0.2197	0	0.2	0	110	65	135	0	0	30	

Qualifiers:

E	Value above quantitation range	H	Holding times for preparation or analysis exceeded	J	Analyte detected below quantitation limits
ND	Not Detected at the Reporting Limit	R	RPD outside accepted recovery limits	S	Spike Recovery outside accepted recovery limits

CLIENT: KLEINFELDER
Work Order: 0809187
Project: 95539

ANALYTICAL QC SUMMARY REPORT

BatchID: R17469

Sample ID	SS080930A-MB	SampType:	MBLK	TestCode:	8270S	Units:	mg/Kg	Prep Date:	9/30/2008	RunNo:	17469
Client ID:	ZZZZZ	Batch ID:	R17469	TestNo:	SW8270C			Analysis Date:	9/30/2008	SeqNo:	250207

Analyte	Result	PQL	SPK value	SPK Ref Val	%REC	LowLimit	HighLimit	RPD Ref Val	%RPD	RPDLimit	Qual
1,2,4-Trichlorobenzene	ND	0.330									
1,2-Dichlorobenzene	ND	0.330									
1,3-Dichlorobenzene	ND	0.330									
1,4-Dichlorobenzene	ND	0.330									
2,4,5-Trichlorophenol	ND	0.330									
2,4,6-Trichlorophenol	ND	0.330									
2,4-Dichlorophenol	ND	0.330									
2,4-Dimethylphenol	ND	0.660									
2,4-Dinitrophenol	ND	1.70									
2,4-Dinitrotoluene	ND	0.330									
2,6-Dinitrotoluene	ND	0.330									
2-Chloronaphthalene	ND	0.330									
2-Chlorophenol	ND	0.330									
2-Methylnaphthalene	ND	0.330									
2-Methylphenol	ND	0.330									
2-Nitroaniline	ND	0.330									
2-Nitrophenol	ND	0.660									
3,3´-Dichlorobenzidine	ND	1.70									
3-Methylphenol	ND	0.330									
3-Nitroaniline	ND	0.330									
4,6-Dinitro-2-methylphenol	ND	0.330									
4-Bromophenyl phenyl ether	ND	0.330									
4-Chloro-3-methylphenol	ND	0.330									
4-Chloroaniline	ND	0.330									
4-Chlorophenyl phenyl ether	ND	0.330									
4-Methylphenol	ND	0.330									
4-Nitroaniline	ND	0.330									
4-Nitrophenol	ND	0.330									
Acenaphthene	ND	0.330									
Acenaphthylene	ND	0.330									
Aniline	ND	0.330									

Qualifiers:

E	Value above quantitation range	H	Holding times for preparation or analysis exceeded	J	Analyte detected below quantitation limits
ND	Not Detected at the Reporting Limit	R	RPD outside accepted recovery limits	S	Spike Recovery outside accepted recovery limits

CLIENT: KLEINFELDER
Work Order: 0809187
Project: 95539

ANALYTICAL QC SUMMARY REPORT

BatchID: R17469

Sample ID	SS080930A-MB	SampType:	MBLK	TestCode:	8270S	Units:	mg/Kg	Prep Date:	9/30/2008	RunNo:	17469
Client ID:	ZZZZZ	Batch ID:	R17469	TestNo:	SW8270C			Analysis Date:	9/30/2008	SeqNo:	250207

Analyte	Result	PQL	SPK value	SPK Ref Val	%REC	LowLimit	HighLimit	RPD Ref Val	%RPD	RPDLimit	Qual
Anthracene	ND	0.330									
Benz(a)anthracene	ND	0.330									
Benzidine	ND	3.30									
Benzo(g,h,i)perylene	ND	0.330									
Benzo[a]pyrene	ND	0.330									
Benzo[b]fluoranthene	ND	0.330									
Benzo[k]fluoranthene	ND	0.330									
Benzoic acid	ND	6.66									
Benzyl alcohol	ND	6.66									
Bis(2-chloroethoxy)methane	ND	0.330									
Bis(2-chloroethyl)ether	ND	0.330									
Bis(2-chloroisopropyl)ether	ND	0.330									
Bis(2-ethylhexyl)phthalate	ND	3.30									
Butyl benzyl phthalate	ND	0.330									
Chrysene	ND	0.660									
Dibenz(a,h)anthracene	ND	0.330									
Dibenzofuran	ND	0.330									
Diethyl phthalate	ND	3.30									
Dimethyl phthalate	ND	3.30									
Di-n-butyl phthalate	ND	3.30									
Di-n-octyl phthalate	ND	0.330									
Fluoranthene	ND	0.330									
Fluorene	ND	0.330									
Hexachlorobenzene	ND	0.330									
Hexachlorobutadiene	ND	0.330									
Hexachlorocyclopentadiene	ND	0.330									
Hexachloroethane	ND	0.330									
Indeno(1,2,3-cd)pyrene	ND	0.330									
Isophorone	ND	0.330									
Naphthalene	ND	0.330									
Nitrobenzene	ND	0.330									

Qualifiers:

E	Value above quantitation range	H	Holding times for preparation or analysis exceeded	J	Analyte detected below quantitation limits
ND	Not Detected at the Reporting Limit	R	RPD outside accepted recovery limits	S	Spike Recovery outside accepted recovery limits

CLIENT: KLEINFELDER
Work Order: 0809187
Project: 95539

ANALYTICAL QC SUMMARY REPORT

BatchID: R17469

Sample ID **SS080930A-MB** SampType: **MBLK** TestCode: **8270S** Units: **mg/Kg** Prep Date: **9/30/2008** RunNo: **17469**
Client ID: **ZZZZZ** Batch ID: **R17469** TestNo: **SW8270C** Analysis Date: **9/30/2008** SeqNo: **250207**

Analyte	Result	PQL	SPK value	SPK Ref Val	%REC	LowLimit	HighLimit	RPD Ref Val	%RPD	RPDLimit	Qual
N-Nitrosodimethylamine	ND	0.330									
N-Nitrosodi-n-propylamine	ND	0.330									
N-Nitrosodiphenylamine	ND	0.330									
Pentachlorophenol	ND	0.330									
Phenanthrene	ND	0.330									
Phenol	ND	0.330									
Pyrene	ND	0.330									
Surr: 2,4,6-Tribromophenol	1.137	0	1.667	0	68.2	16.5	114				
Surr: 2-Fluorobiphenyl	0.4644	0	0.833	0	55.8	24.1	85.6				
Surr: 2-Fluorophenol	1.030	0	1.667	0	61.8	30.3	76.6				
Surr: Nitrobenzene-d5	0.4293	0	0.833	0	51.5	29.4	78.2				
Surr: Phenol-d6	1.101	0	1.667	0	66.1	28.7	84.7				
Surr: p-Terphenyl-d14	0.5978	0	0.833	0	71.8	37.9	127				

Sample ID **SS080930A-LCS RE** SampType: **LCS** TestCode: **8270S** Units: **mg/Kg** Prep Date: **9/30/2008** RunNo: **17469**
Client ID: **ZZZZZ** Batch ID: **R17469** TestNo: **SW8270C** Analysis Date: **9/30/2008** SeqNo: **250228**

Analyte	Result	PQL	SPK value	SPK Ref Val	%REC	LowLimit	HighLimit	RPD Ref Val	%RPD	RPDLimit	Qual
1,2,4-Trichlorobenzene	0.3212	0	0.8333	0	38.5	31.7	85.1				
1,4-Dichlorobenzene	0.3436	0.330	0.8333	0	41.2	38.8	77.2				
2,4-Dinitrotoluene	0.5620	0.330	0.8333	0	67.4	30.8	124				
2-Chlorophenol	0.6615	0.330	1.667	0	39.7	25.3	88.7				
4-Chloro-3-methylphenol	0.7565	0.330	1.667	0	45.4	24.9	97.2				
4-Nitrophenol	0.7466	0.330	1.667	0	44.8	11.1	126				
Acenaphthene	0.3470	0.330	0.8333	0	41.6	29.1	94.8				
N-Nitrosodi-n-propylamine	0.7270	0.330	1.667	0	43.6	15.5	116				
Pentachlorophenol	0.6515	0.330	1.667	0	39.1	19.9	133				
Phenol	0.6806	0.330	1.667	0	40.8	16	98.6				
Pyrene	0.4771	0.330	0.8333	0	57.3	34.2	127				
Surr: 2,4,6-Tribromophenol	0.9796	0	1.667	0	58.8	16.5	114				
Surr: 2-Fluorobiphenyl	0.3108	0	0.8333	0	37.3	24.1	85.6				

Qualifiers:
E Value above quantitation range
ND Not Detected at the Reporting Limit
H Holding times for preparation or analysis exceeded
R RPD outside accepted recovery limits
J Analyte detected below quantitation limits
S Spike Recovery outside accepted recovery limits

CLIENT: KLEINFELDER
Work Order: 0809187
Project: 95539

ANALYTICAL QC SUMMARY REPORT

BatchID: R17469

Sample ID	SampType	TestCode	Units	Prep Date	RunNo
SS080930A-LCS RE	**LCS**	**8270S**	**mg/Kg**	**9/30/2008**	**17469**
Client ID: **ZZZZZ**	Batch ID: **R17469**	TestNo: **SW8270C**		Analysis Date: **9/30/2008**	SeqNo: **250228**

Analyte	Result	PQL	SPK value	SPK Ref Val	%REC	LowLimit	HighLimit	RPD Ref Val	%RPD	RPDLimit	Qual
Surr: 2-Fluorophenol	0.6701	0	1.667	0	40.2	30.3	76.6				
Surr: Nitrobenzene-d5	0.2983	0	0.5049	0	59.1	29.4	78.2				
Surr: Phenol-d6	0.7038	0	1.667	0	42.2	28.7	84.7				
Surr: p-Terphenyl-d14	0.4968	0	0.8333	0	59.6	37.9	127				

Sample ID	SampType	TestCode	Units	Prep Date	RunNo
SS080930A-LCSD R	**LCSD**	**8270S**	**mg/Kg**	**9/30/2008**	**17469**
Client ID: **ZZZZZ**	Batch ID: **R17469**	TestNo: **SW8270C**		Analysis Date: **9/30/2008**	SeqNo: **250229**

Analyte	Result	PQL	SPK value	SPK Ref Val	%REC	LowLimit	HighLimit	RPD Ref Val	%RPD	RPDLimit	Qual
1,2,4-Trichlorobenzene	0.3286	0	0.8333	0	39.4	31.7	85.1	0.3212	2.29	35	
1,4-Dichlorobenzene	0.3343	0.330	0.8333	0	40.1	38.8	77.2	0.3436	2.75	32	
2,4-Dinitrotoluene	0.6214	0.330	0.8333	0	74.6	30.8	124	0.562	10.0	30	
2-Chlorophenol	0.6239	0.330	1.667	0	37.4	25.3	88.7	0.6615	5.86	35	
4-Chloro-3-methylphenol	0.8218	0.330	1.667	0	49.3	24.9	97.2	0.7565	8.28	37	
4-Nitrophenol	0.9898	0.330	1.667	0	59.4	11.1	126	0.7466	28.0	47	
Acenaphthene	0.3606	0.330	0.8333	0	43.3	29.1	94.8	0.347	3.86	30	
N-Nitrosodi-n-propylamine	0.6536	0.330	1.667	0	39.2	15.5	116	0.727	10.6	55	
Pentachlorophenol	0.9916	0.330	1.667	0	59.5	19.9	133	0.6515	41.4	49	
Phenol	0.6334	0.330	1.667	0	38.0	16	98.6	0.6806	7.18	35	
Pyrene	0.5015	0.330	0.8333	0	60.2	34.2	127	0.4771	4.98	30	
Surr: 2,4,6-Tribromophenol	1.199	0	1.667	0	71.9	16.5	114	0	0	0	
Surr: 2-Fluorobiphenyl	0.3025	0	0.8333	0	36.3	24.1	85.6	0	0	0	
Surr: 2-Fluorophenol	0.5896	0	1.667	0	35.4	30.3	76.6	0	0	0	
Surr: Nitrobenzene-d5	0.3002	0	0.5049	0	59.5	29.4	78.2	0	0	0	
Surr: Phenol-d6	0.6571	0	1.667	0	39.4	28.7	84.7	0	0	0	
Surr: p-Terphenyl-d14	0.5251	0	0.8333	0	63.0	37.9	127	0	0	0	

Sample ID	SampType	TestCode	Units	Prep Date	RunNo
0809187-001AMS	**MS**	**8270S**	**mg/Kg**	**9/30/2008**	**17469**
Client ID: **T-E2-1-8**	Batch ID: **R17469**	TestNo: **SW8270C**		Analysis Date: **10/1/2008**	SeqNo: **250601**

Analyte	Result	PQL	SPK value	SPK Ref Val	%REC	LowLimit	HighLimit	RPD Ref Val	%RPD	RPDLimit	Qual

Qualifiers:

E	Value above quantitation range	H	Holding times for preparation or analysis exceeded	J	Analyte detected below quantitation limits
ND	Not Detected at the Reporting Limit	R	RPD outside accepted recovery limits	S	Spike Recovery outside accepted recovery limits

CLIENT: KLEINFELDER
Work Order: 0809187
Project: 95539

ANALYTICAL QC SUMMARY REPORT

BatchID: R17469

Sample ID	0809187-001AMS	SampType:	MS	TestCode:	8270S	Units:	mg/Kg	Prep Date:	9/30/2008	RunNo:	17469
Client ID:	T-E2-1-8	Batch ID:	R17469	TestNo:	SW8270C			Analysis Date:	10/1/2008	SeqNo:	250601

Analyte	Result	PQL	SPK value	SPK Ref Val	%REC	LowLimit	HighLimit	RPD Ref Val	%RPD	RPDLimit	Qual
1,2,4-Trichlorobenzene	0.5627	0.330	0.8333	0	67.5	31.7	85.1				
1,4-Dichlorobenzene	0.5055	0.330	0.8333	0	60.7	38.8	77.2				
2,4-Dinitrotoluene	0.6605	0.330	0.8333	0	79.3	30.8	124				
2-Chlorophenol	1.383	0.330	1.667	0	83.0	25.3	88.7				
4-Chloro-3-methylphenol	1.423	0.330	1.667	0	85.3	24.9	97.2				
4-Nitrophenol	1.592	0.330	1.667	0	95.5	11.1	126				
Acenaphthene	0.5727	0.330	0.883	0	64.9	29.1	94.8				
N-Nitrosodi-n-propylamine	0.5788	0.330	0.883	0	65.5	15.5	116				
Pentachlorophenol	2.037	0.330	1.667	0	122	19.9	133				
Phenol	1.242	0.330	1.667	0	74.5	16	98.6				
Pyrene	0.6791	0.330	0.883	0	76.9	34.2	127				
Surr: 2,4,6-Tribromophenol	0.9683	0	1.667	0	58.1	16.5	114				
Surr: 2-Fluorobiphenyl	0.3541	0	0.8333	0	42.5	24.1	85.6				
Surr: 2-Fluorophenol	0.8445	0	1.667	0	50.7	30.3	76.6				
Surr: Nitrobenzene-d5	0.3306	0	0.5049	0	65.5	29.4	78.2				
Surr: Phenol-d6	0.7665	0	1.667	0	46.0	28.7	84.7				
Surr: p-Terphenyl-d14	0.6326	0	0.8333	0	75.9	37.9	127				

Qualifiers:

E	Value above quantitation range	H	Holding times for preparation or analysis exceeded	J	Analyte detected below quantitation limits
ND	Not Detected at the Reporting Limit	R	RPD outside accepted recovery limits	S	Spike Recovery outside accepted recovery limits

CLIENT: KLEINFELDER
Work Order: 0809187
Project: 95539

ANALYTICAL QC SUMMARY REPORT

BatchID: R17471

Sample ID	MB_R17471	SampType:	MBLK	TestCode:	8260B_S	Units:	µg/Kg	Prep Date:	9/30/2008	RunNo:	17471
Client ID:	ZZZZZ	Batch ID:	R17471	TestNo:	SW8260B			Analysis Date:	9/30/2008	SeqNo:	250231

Analyte	Result	PQL	SPK value	SPK Ref Val	%REC	LowLimit	HighLimit	RPD Ref Val	%RPD	RPDLimit	Qual
1,1,1,2-Tetrachloroethane	ND	10									
1,1,1-Trichloroethane	ND	10									
1,1,2,2-Tetrachloroethane	ND	10									
1,1,2-Trichloroethane	ND	10									
1,1-Dichloroethane	ND	10									
1,1-Dichloroethene	ND	10									
1,1-Dichloropropene	ND	10									
1,2,3-Trichlorobenzene	ND	10									
1,2,3-Trichloropropane	ND	10									
1,2,4-Trichlorobenzene	ND	10									
1,2,4-Trimethylbenzene	ND	10									
1,2-Dibromo-3-chloropropane	ND	10									
1,2-Dibromoethane (EDB)	ND	10									
1,2-Dichlorobenzene	ND	10									
1,2-Dichloroethane (EDC)	ND	10									
1,2-Dichloropropane	ND	10									
1,3,5-Trimethylbenzene	ND	10									
1,3-Dichlorobenzene	ND	10									
1,3-Dichloropropene	ND	10									
1,4-Dichlorobenzene	ND	10									
2,2-Dichloropropane	ND	10									
2-Chloroethyl vinyl ether	ND	10									
2-Chlorotoluene	ND	10									
4-Chlorotoluene	ND	10									
4-Isopropyltoluene	ND	10									
Benzene	ND	10									
Bromobenzene	ND	10									
Bromochloromethane	ND	10									
Bromodichloromethane	ND	10									
Bromoform	ND	10									
Bromomethane	ND	10									

Qualifiers:

E	Value above quantitation range	H	Holding times for preparation or analysis exceeded	J	Analyte detected below quantitation limits
ND	Not Detected at the Reporting Limit	R	RPD outside accepted recovery limits	S	Spike Recovery outside accepted recovery limits

CLIENT: KLEINFELDER
Work Order: 0809187
Project: 95539

ANALYTICAL QC SUMMARY REPORT

BatchID: R17471

Sample ID	MB_R17471	SampType:	MBLK	TestCode:	8260B_S	Units:	µg/Kg	Prep Date:	9/30/2008	RunNo:	17471
Client ID:	ZZZZZ	Batch ID:	R17471	TestNo:	SW8260B			Analysis Date:	9/30/2008	SeqNo:	250231

Analyte	Result	PQL	SPK value	SPK Ref Val	%REC	LowLimit	HighLimit	RPD Ref Val	%RPD	RPDLimit	Qual
Carbon tetrachloride	ND	10									
Chlorobenzene	ND	10									
Chloroform	ND	10									
Chloromethane	ND	10									
cis-1,2-Dichloroethene	ND	10									
cis-1,3-Dichloropropene	ND	10									
Dibromochloromethane	ND	10									
Dibromomethane	ND	10									
Dichlorodifluoromethane	ND	10									
Ethyl tert-butyl ether (ETBE)	ND	10									
Ethylbenzene	ND	10									
Freon-113	ND	10									
Hexachlorobutadiene	ND	10									
Isopropyl Ether	ND	10									
Isopropylbenzene	ND	10									
Methyl tert-butyl ether (MTBE)	ND	10									
Methylene chloride	ND	50									
Naphthalene	ND	20									
n-Butylbenzene	ND	10									
n-Propylbenzene	ND	10									
sec-Butylbenzene	ND	10									
Styrene	ND	10									
t-Butyl alcohol (t-Butanol)	ND	50									
tert-Amyl methyl ether (TAME)	ND	10									
tert-Butylbenzene	ND	10									
Tetrachloroethene	ND	10									
Toluene	ND	10									
trans-1,2-Dichloroethene	ND	10									
trans-1,3-Dichloropropene	ND	10									
Trichloroethene	ND	10									
Trichlorofluoromethane	ND	10									

Qualifiers:

E	Value above quantitation range	H	Holding times for preparation or analysis exceeded	J	Analyte detected below quantitation limits
ND	Not Detected at the Reporting Limit	R	RPD outside accepted recovery limits	S	Spike Recovery outside accepted recovery limits

CLIENT: KLEINFELDER
Work Order: 0809187
Project: 95539

ANALYTICAL QC SUMMARY REPORT

BatchID: R17471

Sample ID	MB_R17471	SampType:	MBLK	TestCode:	8260B_S	Units:	µg/Kg	Prep Date:	9/30/2008	RunNo:	17471
Client ID:	ZZZZZ	Batch ID:	R17471	TestNo:	SW8260B			Analysis Date:	9/30/2008	SeqNo:	250231

Analyte	Result	PQL	SPK value	SPK Ref Val	%REC	LowLimit	HighLimit	RPD Ref Val	%RPD	RPDLimit	Qual
Vinyl chloride	ND	10									
Xylenes, Total	ND	15									
Surr: 4-Bromofluorobenzene	49.97	0	50	0	99.9	55.8	141				
Surr: Dibromofluoromethane	64.80	0	50	0	130	59.8	148				
Surr: Toluene-d8	42.01	0	50	0	84.0	55.2	133				

Sample ID	LCS_R17471	SampType:	LCS	TestCode:	8260B_S	Units:	µg/Kg	Prep Date:	9/30/2008	RunNo:	17471
Client ID:	ZZZZZ	Batch ID:	R17471	TestNo:	SW8260B			Analysis Date:	9/30/2008	SeqNo:	250232

Analyte	Result	PQL	SPK value	SPK Ref Val	%REC	LowLimit	HighLimit	RPD Ref Val	%RPD	RPDLimit	Qual
1,1-Dichloroethene	38.95	10	50	0	77.9	53.7	139				
Benzene	45.26	10	50	0	90.5	66.5	135				
Chlorobenzene	53.82	10	50	0	108	57.5	150				
Toluene	41.04	10	50	0	82.1	56.8	134				
Trichloroethene	59.17	10	50	0	118	57.4	134				
Surr: 4-Bromofluorobenzene	49.32	0	50	0	98.6	55.8	141				
Surr: Dibromofluoromethane	56.75	0	50	0	114	59.8	148				
Surr: Toluene-d8	50.67	0	50	0	101	55.2	133				

Sample ID	LCSD_R17471	SampType:	LCSD	TestCode:	8260B_S	Units:	µg/Kg	Prep Date:	9/30/2008	RunNo:	17471
Client ID:	ZZZZZ	Batch ID:	R17471	TestNo:	SW8260B			Analysis Date:	9/30/2008	SeqNo:	250233

Analyte	Result	PQL	SPK value	SPK Ref Val	%REC	LowLimit	HighLimit	RPD Ref Val	%RPD	RPDLimit	Qual
1,1-Dichloroethene	43.13	10	50	0	86.3	53.7	139	38.95	10.2	30	
Benzene	48.01	10	50	0	96.0	66.5	135	45.26	5.90	30	
Chlorobenzene	52.40	10	50	0	105	57.5	150	53.82	2.67	30	
Toluene	43.89	10	50	0	87.8	56.8	134	41.04	6.71	30	
Trichloroethene	54.92	10	50	0	110	57.4	134	59.17	7.45	30	
Surr: 4-Bromofluorobenzene	45.56	0	50	0	91.1	55.8	141	0	0	0	
Surr: Dibromofluoromethane	45.93	0	50	0	91.9	59.8	148	0	0	0	
Surr: Toluene-d8	50.73	0	50	0	101	55.2	133	0	0	0	

Qualifiers:
E Value above quantitation range
ND Not Detected at the Reporting Limit
H Holding times for preparation or analysis exceeded
R RPD outside accepted recovery limits
J Analyte detected below quantitation limits
S Spike Recovery outside accepted recovery limits

CLIENT: KLEINFELDER
Work Order: 0809187
Project: 95539

ANALYTICAL QC SUMMARY REPORT

BatchID: R17478

Sample ID	SampType	TestCode	Units	Prep Date	RunNo
SQ080929A-MB	**MBLK**	**8082S**	**mg/Kg**	**9/29/2008**	**17478**
Client ID: **ZZZZZ**	Batch ID: **R17478**	TestNo: **SW8082**		Analysis Date: **9/30/2008**	SeqNo: **250337**

Analyte	Result	PQL	SPK value	SPK Ref Val	%REC	LowLimit	HighLimit	RPD Ref Val	%RPD	RPDLimit	Qual
Aroclor 1016	ND	0.100									
Aroclor 1221	ND	0.200									
Aroclor 1232	ND	0.100									
Aroclor 1242	ND	0.100									
Aroclor 1248	ND	0.100									
Aroclor 1254	ND	0.100									
Aroclor 1260	ND	0.100									
Surr: Decachlorobiphenyl	0.04638	0	0.05	0	92.8	55.1	113				
Surr: Tetrachloro-m-xylene	0.05024	0	0.05	0	100	51.7	128				

Sample ID	SampType	TestCode	Units	Prep Date	RunNo
SQ080929A-LCS	**LCS**	**8082S**	**mg/Kg**	**9/29/2008**	**17478**
Client ID: **ZZZZZ**	Batch ID: **R17478**	TestNo: **SW8082**		Analysis Date: **9/30/2008**	SeqNo: **250338**

Analyte	Result	PQL	SPK value	SPK Ref Val	%REC	LowLimit	HighLimit	RPD Ref Val	%RPD	RPDLimit	Qual
Aroclor 1016	1.074	0.100	1	0	107	55.6	135				
Aroclor 1260	0.5497	0.100	0.5	0	110	65.6	132				
Surr: Decachlorobiphenyl	0.04651	0	0.05	0	93.0	55.1	113				
Surr: Tetrachloro-m-xylene	0.04852	0	0.05	0	97.0	51.7	128				

Sample ID	SampType	TestCode	Units	Prep Date	RunNo
SQ080929A-LCSD	**LCSD**	**8082S**	**mg/Kg**	**9/29/2008**	**17478**
Client ID: **ZZZZZ**	Batch ID: **R17478**	TestNo: **SW8082**		Analysis Date: **9/30/2008**	SeqNo: **250339**

Analyte	Result	PQL	SPK value	SPK Ref Val	%REC	LowLimit	HighLimit	RPD Ref Val	%RPD	RPDLimit	Qual
Aroclor 1016	1.111	0.100	1	0	111	55.6	135	1.074	3.40	30	
Aroclor 1260	0.5725	0.100	0.5	0	115	65.6	132	0.5497	4.08	30	
Surr: Decachlorobiphenyl	0.04808	0	0.05	0	96.2	55.1	113	0	0	0	
Surr: Tetrachloro-m-xylene	0.04993	0	0.05	0	99.9	51.7	128	0	0	0	

Qualifiers:

E	Value above quantitation range	H	Holding times for preparation or analysis exceeded	J	Analyte detected below quantitation limits
ND	Not Detected at the Reporting Limit	R	RPD outside accepted recovery limits	S	Spike Recovery outside accepted recovery limits

CLIENT: KLEINFELDER
Work Order: 0809187
Project: 95539

ANALYTICAL QC SUMMARY REPORT

BatchID: R17478

Sample ID	0809187-002A MS	SampType:	MS	TestCode:	8082S	Units:	mg/Kg	Prep Date:	9/29/2008	RunNo:	17478
Client ID:	T-E2-2-3	Batch ID:	R17478	TestNo:	SW8082			Analysis Date:	9/30/2008	SeqNo:	250352

Analyte	Result	PQL	SPK value	SPK Ref Val	%REC	LowLimit	HighLimit	RPD Ref Val	%RPD	RPDLimit	Qual
Aroclor 1016	1.104	0.100	1	0	110	55.9	130				
Aroclor 1260	0.5580	0.100	0.5	0	112	57.1	130				
Surr: Decachlorobiphenyl	0.04787	0	0.05	0	95.7	55.1	113				
Surr: Tetrachloro-m-xylene	0.05108	0	0.05	0	102	65.3	133				

Sample ID	0809187-002A MSD	SampType:	MSD	TestCode:	8082S	Units:	mg/Kg	Prep Date:	9/29/2008	RunNo:	17478
Client ID:	T-E2-2-3	Batch ID:	R17478	TestNo:	SW8082			Analysis Date:	9/30/2008	SeqNo:	250353

Analyte	Result	PQL	SPK value	SPK Ref Val	%REC	LowLimit	HighLimit	RPD Ref Val	%RPD	RPDLimit	Qual
Aroclor 1016	1.121	0.100	1	0	112	55.9	130	1.104	1.50	30	
Aroclor 1260	0.5665	0.100	0.5	0	113	57.1	130	0.558	1.51	30	
Surr: Decachlorobiphenyl	0.04769	0	0.05	0	95.4	55.1	113	0	0	0	
Surr: Tetrachloro-m-xylene	0.04943	0	0.05	0	98.9	65.3	133	0	0	0	

Qualifiers:

E	Value above quantitation range	H	Holding times for preparation or analysis exceeded	J	Analyte detected below quantitation limits
ND	Not Detected at the Reporting Limit	R	RPD outside accepted recovery limits	S	Spike Recovery outside accepted recovery limits

CLIENT: KLEINFELDER
Work Order: 0809187
Project: 95539

ANALYTICAL QC SUMMARY REPORT

BatchID: R17484

Sample ID	SP080929A-MB	SampType:	MBLK	TestCode:	8081S	Units:	µg/Kg	Prep Date:	9/29/2008	RunNo:	17484
Client ID:	ZZZZZ	Batch ID:	R17484	TestNo:	SW8081A			Analysis Date:	9/30/2008	SeqNo:	250415

Analyte	Result	PQL	SPK value	SPK Ref Val	%REC	LowLimit	HighLimit	RPD Ref Val	%RPD	RPDLimit	Qual
4,4´-DDD	ND	2.00									
4,4´-DDE	ND	2.00									
4,4´-DDT	ND	2.00									
Aldrin	ND	2.00									
alpha-BHC	ND	2.00									
alpha-Chlordane	ND	2.00									
beta-BHC	ND	2.00									
Chlordane	ND	20.0									
delta-BHC	ND	2.00									
Dieldrin	ND	2.00									
Endosulfan I	ND	2.00									
Endosulfan II	ND	2.00									
Endosulfan sulfate	ND	2.00									
Endrin	ND	2.00									
Endrin aldehyde	ND	2.00									
Endrin ketone	ND	2.00									
gamma-BHC	ND	2.00									
gamma-Chlordane	ND	2.00									
Heptachlor	ND	2.00									
Heptachlor epoxide	ND	2.00									
Methoxychlor	ND	5.00									
Toxaphene	ND	100									
Surr: Decachlorobiphenyl	52.34	0	50	0	105	57	126				
Surr: Tetrachloro-m-xylene	49.62	0	50	0	99.2	55.7	122				

Sample ID	SP080929A-LCS	SampType:	LCS	TestCode:	8081S	Units:	µg/Kg	Prep Date:	9/29/2008	RunNo:	17484
Client ID:	ZZZZZ	Batch ID:	R17484	TestNo:	SW8081A			Analysis Date:	9/30/2008	SeqNo:	250416

Analyte	Result	PQL	SPK value	SPK Ref Val	%REC	LowLimit	HighLimit	RPD Ref Val	%RPD	RPDLimit	Qual
4,4´-DDD	19.23	2.00	20	0	96.2	39.6	130				
4,4´-DDE	20.45	2.00	20	0	102	45.3	130				

Qualifiers:

E	Value above quantitation range	H	Holding times for preparation or analysis exceeded	J	Analyte detected below quantitation limits
ND	Not Detected at the Reporting Limit	R	RPD outside accepted recovery limits	S	Spike Recovery outside accepted recovery limits

CLIENT: KLEINFELDER
Work Order: 0809187
Project: 95539

ANALYTICAL QC SUMMARY REPORT

BatchID: R17484

Sample ID **SP080929A-LCS** SampType: **LCS** TestCode: **8081S** Units: **µg/Kg** Prep Date: **9/29/2008** RunNo: **17484**
Client ID: **ZZZZZ** Batch ID: **R17484** TestNo: **SW8081A** Analysis Date: **9/30/2008** SeqNo: **250416**

Analyte	Result	PQL	SPK value	SPK Ref Val	%REC	LowLimit	HighLimit	RPD Ref Val	%RPD	RPDLimit	Qual
4,4´-DDT	19.35	2.00	20	0	96.7	52.8	134				
Aldrin	19.86	2.00	20	0	99.3	53	123				
alpha-BHC	19.31	2.00	20	0	96.6	44.2	130				
alpha-Chlordane	20.50	2.00	20	0	102	42.4	133				
beta-BHC	20.08	2.00	20	0	100	44.2	127				
delta-BHC	19.54	2.00	20	0	97.7	67.6	117				
Dieldrin	19.80	2.00	20	0	99.0	44	130				
Endosulfan I	20.26	2.00	20	0	101	65.5	112				
Endosulfan II	15.33	2.00	20	0	76.6	56.9	117				
Endrin	19.82	2.00	20	0	99.1	44.1	121				
Endrin ketone	15.19	2.00	20	0	75.9	53.9	120				
gamma-BHC	19.57	2.00	20	0	97.8	56.9	120				
gamma-Chlordane	20.06	2.00	20	0	100	68.7	112				
Heptachlor	20.11	2.00	20	0	101	63.6	117				
Heptachlor epoxide	20.82	2.00	20	0	104	54.6	137				
Methoxychlor	19.96	5.00	20	0	99.8	57	126				
Surr: Decachlorobiphenyl	69.25	0	70	0	98.9	57	126				
Surr: Tetrachloro-m-xylene	66.19	0	70	0	94.6	55.7	122				

Sample ID **SP080929A-LCSD** SampType: **LCSD** TestCode: **8081S** Units: **µg/Kg** Prep Date: **9/29/2008** RunNo: **17484**
Client ID: **ZZZZZ** Batch ID: **R17484** TestNo: **SW8081A** Analysis Date: **9/30/2008** SeqNo: **250417**

Analyte	Result	PQL	SPK value	SPK Ref Val	%REC	LowLimit	HighLimit	RPD Ref Val	%RPD	RPDLimit	Qual
4,4´-DDD	18.68	2.00	20	0	93.4	39.6	130	19.23	2.91	30	
4,4´-DDE	19.33	2.00	20	0	96.6	45.3	130	20.45	5.62	30	
4,4´-DDT	18.67	2.00	20	0	93.4	52.8	134	19.35	3.54	30	
Aldrin	19.25	2.00	20	0	96.2	53	123	19.86	3.14	30	
alpha-BHC	18.64	2.00	20	0	93.2	44.2	130	19.31	3.53	30	
alpha-Chlordane	19.87	2.00	20	0	99.4	42.4	133	20.5	3.08	30	
beta-BHC	19.35	2.00	20	0	96.8	44.2	127	20.08	3.66	30	
delta-BHC	18.70	2.00	20	0	93.5	67.6	117	19.54	4.42	30	

Qualifiers:
E Value above quantitation range
ND Not Detected at the Reporting Limit
H Holding times for preparation or analysis exceeded
R RPD outside accepted recovery limits
J Analyte detected below quantitation limits
S Spike Recovery outside accepted recovery limits

CLIENT: KLEINFELDER
Work Order: 0809187
Project: 95539

ANALYTICAL QC SUMMARY REPORT

BatchID: R17484

Sample ID **SP080929A-LCSD** SampType: **LCSD** TestCode: **8081S** Units: **µg/Kg** Prep Date: **9/29/2008** RunNo: **17484**
Client ID: **ZZZZZ** Batch ID: **R17484** TestNo: **SW8081A** Analysis Date: **9/30/2008** SeqNo: **250417**

Analyte	Result	PQL	SPK value	SPK Ref Val	%REC	LowLimit	HighLimit	RPD Ref Val	%RPD	RPDLimit	Qual
Dieldrin	19.13	2.00	20	0	95.7	44	130	19.8	3.45	30	
Endosulfan I	19.68	2.00	20	0	98.4	65.5	112	20.26	2.89	30	
Endosulfan II	17.24	2.00	20	0	86.2	56.9	117	15.33	11.7	30	
Endrin	19.37	2.00	20	0	96.8	44.1	121	19.82	2.31	30	
Endrin ketone	16.88	2.00	20	0	84.4	53.9	120	15.19	10.5	30	
gamma-BHC	18.91	2.00	20	0	94.6	56.9	120	19.57	3.40	30	
gamma-Chlordane	19.61	2.00	20	0	98.0	68.7	112	20.06	2.29	30	
Heptachlor	19.63	2.00	20	0	98.1	63.6	117	20.11	2.41	30	
Heptachlor epoxide	20.15	2.00	20	0	101	54.6	137	20.82	3.29	30	
Methoxychlor	19.05	5.00	20	0	95.3	57	126	19.96	4.63	30	
Surr: Decachlorobiphenyl	66.66	0	70	0	95.2	57	126	0	0	0	
Surr: Tetrachloro-m-xylene	62.95	0	70	0	89.9	55.7	122	0	0	0	

Sample ID **0809187-002A MS** SampType: **MS** TestCode: **8081S** Units: **µg/Kg** Prep Date: **9/29/2008** RunNo: **17484**
Client ID: **T-E2-2-3** Batch ID: **R17484** TestNo: **SW8081A** Analysis Date: **9/30/2008** SeqNo: **250429**

Analyte	Result	PQL	SPK value	SPK Ref Val	%REC	LowLimit	HighLimit	RPD Ref Val	%RPD	RPDLimit	Qual
4,4´-DDT	20.76	2.00	20	0	104	55.9	137				
Aldrin	20.64	2.00	20	0	103	45.7	123				
Dieldrin	20.50	2.00	20	0	103	52	130				
Endrin	21.50	2.00	20	0	108	51.6	136				
gamma-BHC	20.37	2.00	20	0	102	49.6	127				
Heptachlor	21.84	2.00	20	0	109	50.6	127				
Surr: Decachlorobiphenyl	72.07	0	70	0	103	45.5	130				
Surr: Tetrachloro-m-xylene	68.95	0	70	0	98.5	48.2	117				

Sample ID **0809187-002A MSD** SampType: **MSD** TestCode: **8081S** Units: **µg/Kg** Prep Date: **9/29/2008** RunNo: **17484**
Client ID: **T-E2-2-3** Batch ID: **R17484** TestNo: **SW8081A** Analysis Date: **9/30/2008** SeqNo: **250430**

Analyte	Result	PQL	SPK value	SPK Ref Val	%REC	LowLimit	HighLimit	RPD Ref Val	%RPD	RPDLimit	Qual
4,4´-DDT	20.77	2.00	20	0	104	55.9	137	20.76	0.0362	30	

Qualifiers:
E Value above quantitation range
H Holding times for preparation or analysis exceeded
J Analyte detected below quantitation limits
ND Not Detected at the Reporting Limit
R RPD outside accepted recovery limits
S Spike Recovery outside accepted recovery limits

CLIENT: KLEINFELDER
Work Order: 0809187
Project: 95539

ANALYTICAL QC SUMMARY REPORT

BatchID: R17484

Sample ID	0809187-002A MSD	SampType:	MSD	TestCode:	8081S	Units:	µg/Kg	Prep Date:	9/29/2008	RunNo:	17484
Client ID:	T-E2-2-3	Batch ID:	R17484	TestNo:	SW8081A			Analysis Date:	9/30/2008	SeqNo:	250430

Analyte	Result	PQL	SPK value	SPK Ref Val	%REC	LowLimit	HighLimit	RPD Ref Val	%RPD	RPDLimit	Qual
Aldrin	20.86	2.00	20	0	104	45.7	123	20.64	1.01	30	
Dieldrin	20.76	2.00	20	0	104	52	130	20.5	1.24	30	
Endrin	21.34	2.00	20	0	107	51.6	136	21.5	0.744	30	
gamma-BHC	20.38	2.00	20	0	102	49.6	127	20.37	0.0442	30	
Heptachlor	21.79	2.00	20	0	109	50.6	127	21.84	0.246	30	
Surr: Decachlorobiphenyl	71.89	0	70	0	103	45.5	130	0	0	0	
Surr: Tetrachloro-m-xylene	69.67	0	70	0	99.5	48.2	117	0	0	0	

Qualifiers:

E	Value above quantitation range	H	Holding times for preparation or analysis exceeded	J	Analyte detected below quantitation limits
ND	Not Detected at the Reporting Limit	R	RPD outside accepted recovery limits	S	Spike Recovery outside accepted recovery limits

CLIENT: KLEINFELDER
Work Order: 0809187
Project: 95539

ANALYTICAL QC SUMMARY REPORT

BatchID: R17488

Sample ID	SampType	TestCode	Units	Prep Date	RunNo
SD080929A-MB	**MBLK**	**TPHD_S**	**mg/Kg**	**9/29/2008**	**17488**
Client ID: **ZZZZZ**	Batch ID: **R17488**	TestNo: **SW8015B**		Analysis Date: **9/29/2008**	SeqNo: **250495**

Analyte	Result	PQL	SPK value	SPK Ref Val	%REC	LowLimit	HighLimit	RPD Ref Val	%RPD	RPDLimit	Qual
TPH (Diesel)	ND	2.00									
Surr: Pentacosane	2.689	0	3.3	0	81.5	59.7	129				

Sample ID	SampType	TestCode	Units	Prep Date	RunNo
SD080929A-LCS	**LCS**	**TPHD_S**	**mg/Kg**	**9/29/2008**	**17488**
Client ID: **ZZZZZ**	Batch ID: **R17488**	TestNo: **SW8015B**		Analysis Date: **9/29/2008**	SeqNo: **250496**

Analyte	Result	PQL	SPK value	SPK Ref Val	%REC	LowLimit	HighLimit	RPD Ref Val	%RPD	RPDLimit	Qual
TPH (Diesel)	27.68	2.00	33.33	0	83.1	52.7	115				
Surr: Pentacosane	2.650	0	3.3	0	80.3	59.7	129				

Sample ID	SampType	TestCode	Units	Prep Date	RunNo
SD080929A-LCSD	**LCSD**	**TPHD_S**	**mg/Kg**	**9/29/2008**	**17488**
Client ID: **ZZZZZ**	Batch ID: **R17488**	TestNo: **SW8015B**		Analysis Date: **9/29/2008**	SeqNo: **250497**

Analyte	Result	PQL	SPK value	SPK Ref Val	%REC	LowLimit	HighLimit	RPD Ref Val	%RPD	RPDLimit	Qual
TPH (Diesel)	28.05	2.00	33.33	0	84.2	52.7	115	27.68	1.32	30	
Surr: Pentacosane	2.907	0	3.3	0	88.1	59.7	129	0	0	0	

Sample ID	SampType	TestCode	Units	Prep Date	RunNo
0809187-008A MS	**MS**	**TPHD_S**	**mg/Kg**	**9/29/2008**	**17488**
Client ID: **T-E1-3-8**	Batch ID: **R17488**	TestNo: **SW8015B**		Analysis Date: **9/30/2008**	SeqNo: **250513**

Analyte	Result	PQL	SPK value	SPK Ref Val	%REC	LowLimit	HighLimit	RPD Ref Val	%RPD	RPDLimit	Qual
TPH (Diesel)	27.50	2.00	33.33	0	82.5	52.7	115				
Surr: Pentacosane	2.613	0	3.3	0	79.2	59.7	129				

Sample ID	SampType	TestCode	Units	Prep Date	RunNo
0809187-008A MSD	**MSD**	**TPHD_S**	**mg/Kg**	**9/29/2008**	**17488**
Client ID: **T-E1-3-8**	Batch ID: **R17488**	TestNo: **SW8015B**		Analysis Date: **9/30/2008**	SeqNo: **250514**

Analyte	Result	PQL	SPK value	SPK Ref Val	%REC	LowLimit	HighLimit	RPD Ref Val	%RPD	RPDLimit	Qual
TPH (Diesel)	30.00	2.00	33.33	0	90.0	52.7	115	27.5	8.69	30	
Surr: Pentacosane	2.654	0	3.3	0	80.4	59.7	129	0	0	0	

Qualifiers:

E	Value above quantitation range	H	Holding times for preparation or analysis exceeded	J	Analyte detected below quantitation limits
ND	Not Detected at the Reporting Limit	R	RPD outside accepted recovery limits	S	Spike Recovery outside accepted recovery limits

KLEINFELDER
Bright People. Right Solutions.

0809187

PROJECT NO. 95539
PROJECT NAME CTO
L.P. NO. (PO. NO.)
SAMPLERS: (Signature/Number) JG
RECEIVING LAB: Torrent
INSTRUCTIONS/REMARKS: Std TAT
Page 1/2

		DATE MM/DD/YY	SAMPLE I.D. TIME HH-MM-SS	SAMPLE I.D.	MATRIX	NO. OF CONTAINERS	TYPE OF CONTAINERS	VOC 8260	TPH 8015	CAM 17 200.7	SVOC 8270	Fuel Oxy 8260	Pesticides 8081	PCBs 8082					INSTRUCTIONS/REMARKS
001A	1	9-22-08	1015	T-E2-1-8	Soil	1	SS Tube	X	X	X	X	X							
002A	2	↓	1100	T-E2-2-3									X	X					
003A	3	9-23-08	0735	T-E1-1A-8				X	X	X	X	X							
004A	4		0755	T-E1-1B-9				X	X	X	X	X							4-Point Composite
005A	5		0840	T-E1-1C-7				X	X	X	X	X							
006A	6		0905	T-E1-1D-3.5				X	X	X	X	X							
007A	7		0825	T-E1-2-8				X	X	X	X	X							
008A	8		0900	T-E1-3-8				X	X	X	X	X							
009A	9		1110	T-A-1A-7				X	X	X	X	X							
010A	10		1117	T-A-1B-8				X	X	X	X	X							3-Point Composite
011A	11		1125	T-A-1C-8				X	X	X	X	X							
012A	12		1130	T-A-2-2									X	X					
013A	13		1250	T-C-1A-8				X	X	X	X	X							
014A	14		1305	T-C-1B-4				X	X	X	X	X							4-Point Composite
015A	15		1310	T-C-1C-8				X	X	X	X	X							
016A	16		1320	T-C-1D-9				X	X	X	X	X							
017A	17	↓	1305	T-C-2-4	↓	↓	↓						X	X					
	18																		
	19																		
	20																		

Relinquished by: (Signature)	Date/Time	Received by: (Signature)
[signature]	9/25 11:07	C Moore
C Moore	9/25 1151	[signature] 9/25/08 12:00pm
Relinquished by: (Signature)	Date/Time	Received for Laboratory by: (Signature)

Instructions/Remarks:
email to
CAlmestad@kleinfelder.com
JGravesen@kleinfelder.com

Send Results To:
Kleinfelder
1980 Broadway Suite 710
Oakland CA 94612
Attn: Charlie Almestad

ENV-02 REV 05/08) NR 9/26

White – Sampler
Canary – Return Copy To Shipper
Pink – Lab Copy

CHAIN OF CUSTODY

Hi Speed

COC № 11513

KLEINFELDER
Bright People. Right Solutions.

0809187

PROJECT NO.	PROJECT NAME	RECEIVING LAB:
95339	CTO	Torrent
L.P. NO. (PO. NO.)	SAMPLERS: (Signature/Number)	INSTRUCTIONS/REMARKS
	JG	Std TAT

Page 2/2

		DATE MM/DD/YY	SAMPLE I.D. TIME HH-MM-SS	SAMPLE I.D.	MATRIX	NO. OF CONTAINERS	TYPE OF CONTAINERS	VOC 8260	TPH 3 d 8015	CAM 17 200.7	SVOC 8270	Fuel Oxy 8260	Pesticides 8081	PCBs 8082					
018A	1	9/24/08	0755	T-B-1A-8	Soil	1	55 Tube	X	X	X	X	X							
019A	2		0805	T-B-1B-4				X	X	X	X	X							4-Point Composite
020A	3		0840	T-B-1C-8				X	X	X	X	X							
021A	4		0850	T-B-1D-5				X	X	X	X	X							
022A	5		0800	T-B-2-3									X	X					
023A	6		1015	T-D3-1A-8				X	X	X	X	X							
024A	7		1020	T-D3-1B-4				X	X	X	X	X							4-Point Composite
025A	8		1030	T-D3-1C-8				X	X	X	X	X							
026A	9		1045	T-D3-1D-9				X	X	X	X	X							
027A	10		1025	T-D3-2-4									X	X					
028A	11			comp 3A-6A															
029A	12			comp 9A-11A															
030A	13			comp 13A-16A															
031A	14			comp 18A-21A															
032A	15			comp 23A-26A															
	16																		
	17																		
	18																		
	19																		
	20																		

Relinquished by: (Signature)	Date/Time	Received by: (Signature)
[signature]	9/25 11:07	C Moore
C Moore	9/25 1151	[signature] 9/25/08 12:00pm
Relinquished by: (Signature)	Date/Time	Received for Laboratory by: (Signature)

Instructions/Remarks: see pg 1

Send Results To: see pg 1

Attn:

ENV-02 REV 05/08)

White – Sampler Canary – Return Copy To Shipper Pink – Lab Copy

CHAIN OF CUSTODY

Hi Speed COC № 11523

APPENDIX I

UNDERGROUND UTILITY PLANS

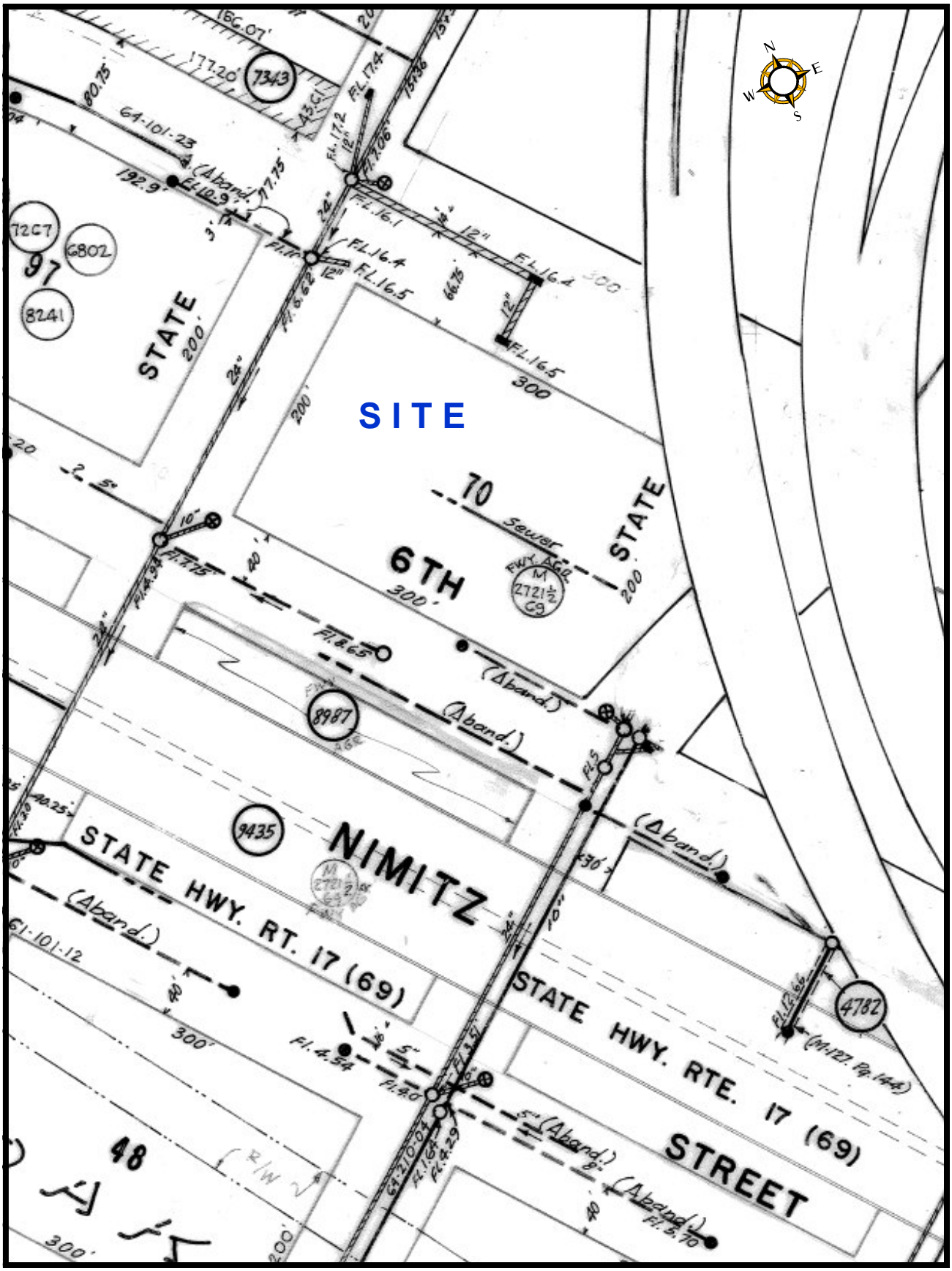

Enlargement from City of Oakland Storm Drain and Sewer Map

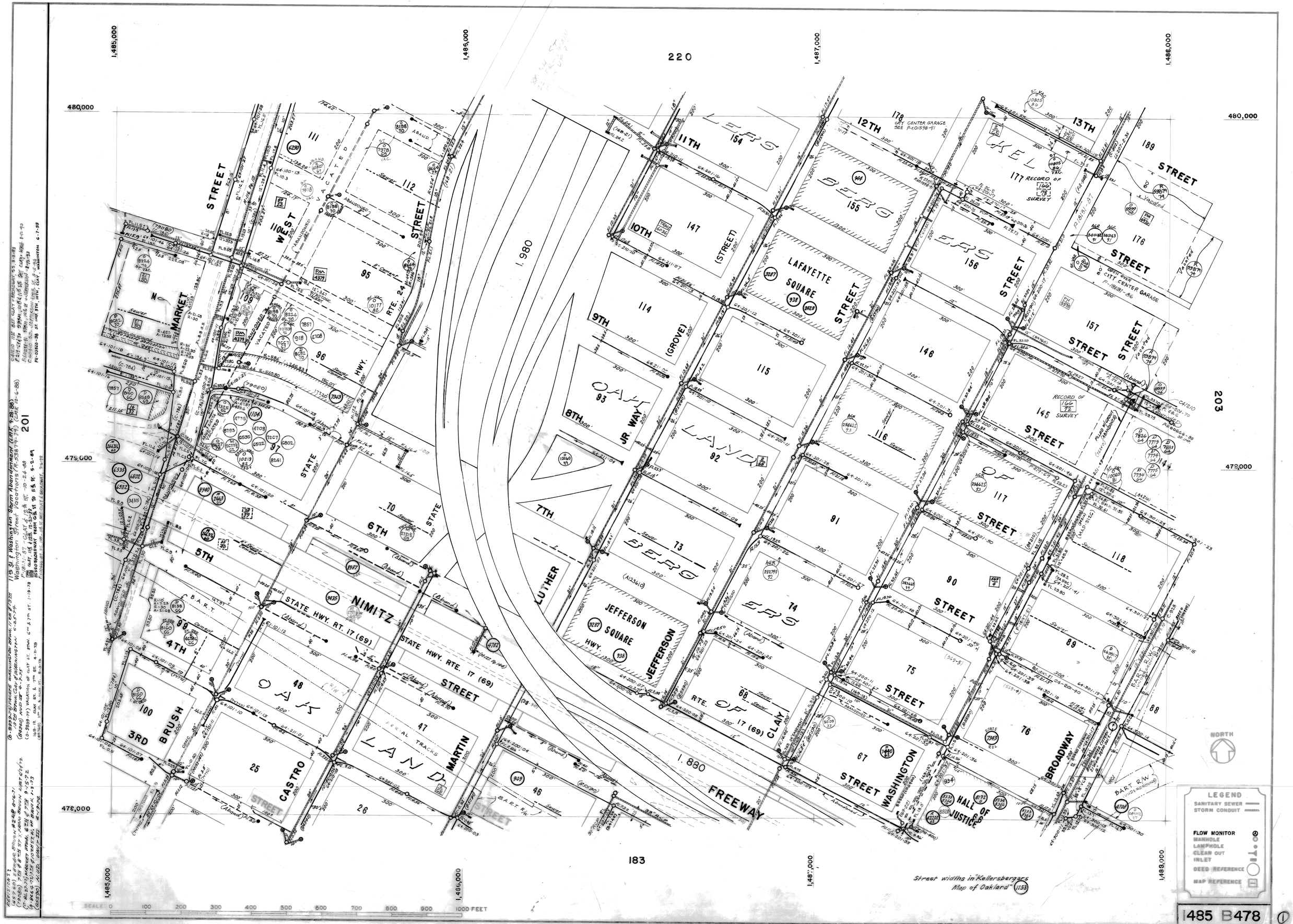
220
183
201
203
202
1,485,000
1,486,000
1,487,000
1,488,000
480,000
479,000
478,000
WEST STREET
MARKET
STATE HWY. RTE. 2.4
STATE HWY. RTE. 17 (69)
STATE STREET
NIMITZ
HWY.
1.980
1.880
FREEWAY
LUTHER
JR. WAY
JEFFERSON
JEFFERSON SQUARE
LAFAYETTE SQUARE
CLAY
STREET
WASHINGTON
STREET
BROADWAY
MARTIN
LUTHER
CASTRO
STREET
3RD
4TH
5TH
6TH
7TH
8TH
9TH
10TH
11TH
12TH
13TH
(GROVE)
(STREET)
OAK
LAND
HALL OF JUSTICE
BART R/W
178 CITY CENTER GARAGE SEE P-X01598-91
177 RECORD OF 166/78 SURVEY
176 CITY CENTER GARAGE P-(B)91-86
145 RECORD OF 166/72 SURVEY
Street widths in "Kellersbergers Map of Oakland" (1153)
NORTH
LEGEND
SANITARY SEWER
STORM CONDUIT
FLOW MONITOR
MANHOLE
LAMPHOLE
CLEAN OUT
INLET
DEED REFERENCE
MAP REFERENCE
SCALE 0 100 200 300 400 500 600 700 800 900 1000 FEET
485 B478
202

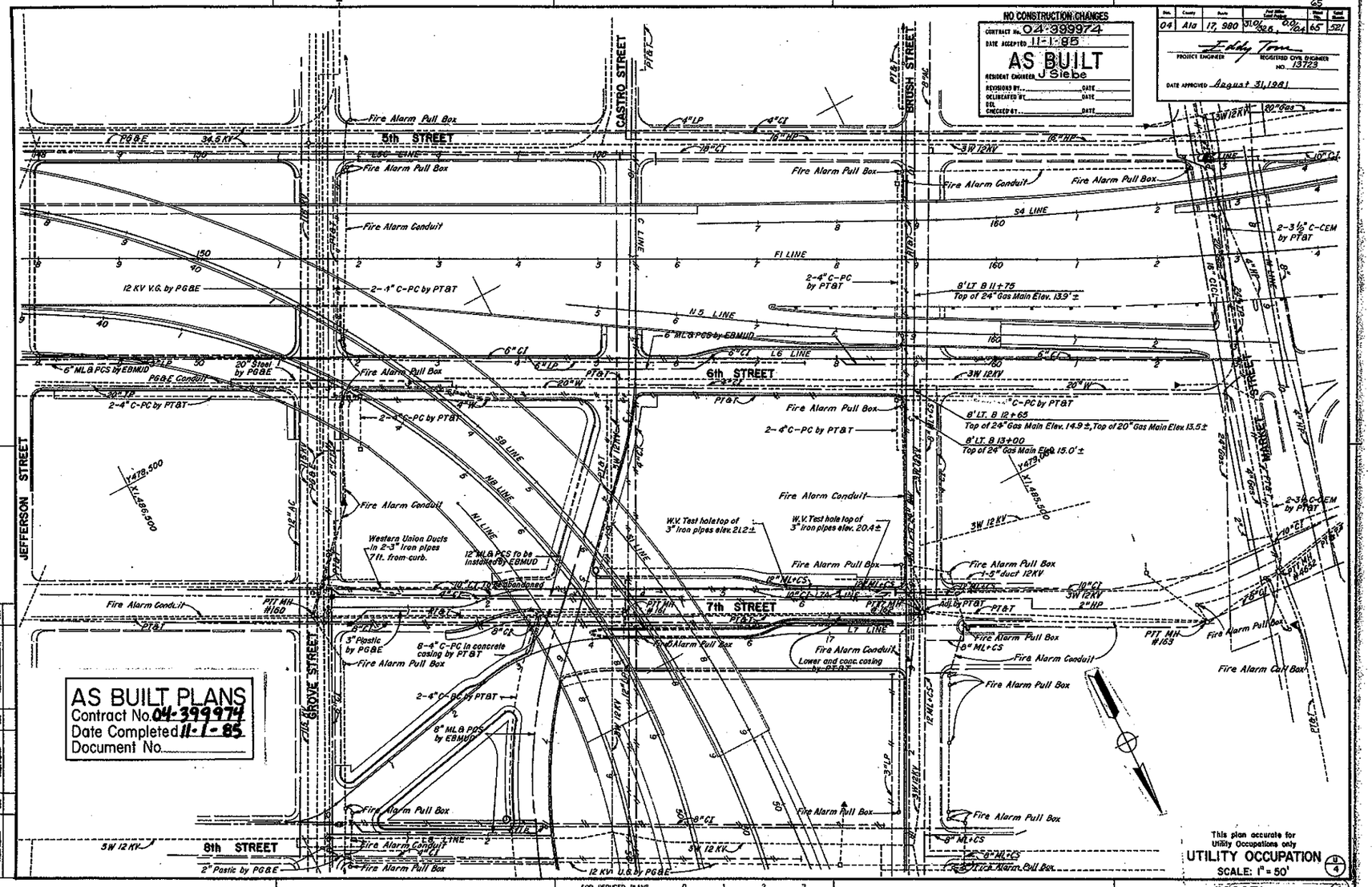

I HEREBY CERTIFY THAT THIS IS A TRUE AND ACCURATE COPY OF THE ABOVE DOCUMENT TAKEN UNDER MY DIRECTION AND CONTROL ON THIS DATE IN SACRAMENTO, CALIFORNIA PURSUANT TO AUTHORIZATION BY THE DIRECTOR OF TRANSPORTATION.

DATE 10/30/89 SIGNATURE Randall Alan Ford TITLE SUPERVISOR OF MICROFILM SERVICES